Installation and Operation Instructions

DRT4000-E & DRT4200-E Series Direct-Vent Gas Fireplaces

P/N 901277-00 REV. A 08/2024

Ce manuel est disponible en francais, simplement en faire la demande. Numéro de la pièce 901277-02.

Report No. 16-120

P901277-00

Models

DRT4040TEN-E	DRT4045TEN-E	DRT4240TEN-E	DRT4245TEN-E
DRT4040TEP-E	DRT4045TEP-E	DRT4240TEP-E	DRT4245TEP-E

INSTALLER: Leave this manual with the appliance. CONSUMER: Retain this manual for future reference.	**Installateur : Laissez cette notice avec l'appareil. Consommateur : Conservez cette notice pour consultation ultérieure.**

This appliance may be installed in an aftermarket permanently located, manufactured home (USA only) or mobile home, where not prohibited by local codes. This appliance is only for use with the type of gas indicated on the rating plate. This appliance is not convertible for use with other gases, unless a certified kit is used.

Cet appareil peut installé dans une maison préfabriquée (mobile) déjà installée à demeure, si les réglements locaux le permettent. Ce appareil doit être utilisé uniquement avec le type de gaz indiqué sure la plaque signalétique. Cet appareil ne peut être converti à d'autres gaz, sauf si une trousse de conversion est utilsée.

⚠ WARNING:

FIRE OR EXPLOSION HAZARD
Failure to follow safety warnings exactly could result in serious injury, death, or property damage.

- Do not store or use gasoline or other flammable vapors and liquids in the vicinity of this or any other appliance.
- WHAT TO DO IF YOU SMELL GAS
  - Do not try to light any appliance.
  - Do not touch any electrical switch; do not use any phone in your building.
  - Leave the building immediately.
  - Immediately call your gas supplier from a neighbor's phone. Follow the gas supplier's instructions.
  - If you cannot reach your gas supplier, call the fire department.
- Installation and service must be performed by a qualified installer, service agency or the gas supplier.

⚠ AVERTISSEMENT:

RISQUED'INDENDIE OU D'EXPLOSION
Le non-respect Des avertissements de sécurité pourrait d'entraîner des blessures graves, la mort ou des dommages matériels.

- Ne pas entreposer ni utilizer d'essence ni d'autres vapeurs ou liquides inflammables dans le voisinage de cet appareil ou de tout autre appareil.
- QUE FAIRE SI VOUS SENTEZ UNE ODEUR DE GAZ:
  - Ne pas tenter d'allumer d'appareil.
  - Ne touchez à aucan interrupteur. Ne pas vous servir des téléphones se trouvant dans le bâtiment où vous trouvez.
  - Sortez immédiatement de bâtiment.
  - Appelez immédiatement votre fournisseur de gaz depuis un voisin. Suivez les instructions du fournisseur.
  - Si vous ne pouvez rejoindre le fournisseur de gaz, appelez le service des incindies.
- L'installation et l'entretien doivent être assurés par un installateur ou un service d'entretien qualifié ou par le fournisseur de gaz.

SAFETY AND YOUR FIREPLACE

See attached color flyer for proper color representation

DANGER

HOT GLASS WILL CAUSE BURNS.

DO NOT TOUCH GLASS UNTIL COOLED.

NEVER ALLOW CHILDREN TO TOUCH GLASS.

A barrier* designed to reduce the risk of burns from the hot viewing glass is provided with this appliance and must be installed for the protection of children and other at-risk individuals. *Included with required facade.

Voir ci-joint tract pour une bonne représentation de la couleur

DANGER

VITRE CHAUDE RISQUE DE BRÛLURES.

NE TOUCHEZ PAS UNE VITRE NON REFROIDIE.

NE LAISSEZ JAMAIS UN ENFANT DE TOUCHER LA VITRE.

L'écran pare-étincelles* fourni avec ce foyer réduit le risque de brûlure en cas de contact accidentel avec la vitre chaude et doit être installé pour la protection Des enfants et Des personnes à risques. *incluse avec le Facade - Requis.

Vea el volante adjunto para la representación de color adecuado

PELIGRO

EL VIDRIO CALIENTE CAUSARÁ QUEMADURAS.

USTED **NUNCA DEBE TOCAR** EL VIDRIO CALIENTE.

LOS NIÑOS **NUNCA DEBE TOCAR** EL VIDRIO.

Se provee con este aparato una barrera* de proteccion (malla), diseñada para reducir el riesgo de quemaduras por contacto accidental con el vidrio caliente que debe estar instalada para proteccion de infantes y otros individuos en riesgo. *Incluida con la fachada requerida.

Safety and Your Fireplace

All parts of your IHP fireplace get EXTREMELY HOT!

☐ To prevent severe burns and injuries, do Not remove the barrier on the appliance which prevents direct contact with the glass.

☐ Follow the safety instructions below and be sure everyone in your household understands this burn hazard:

- **The surfaces on your fireplace get EXTREMELY HOT!**
- **The glass on the front of the fireplace reaches EXTREMELY HIGH temperatures and can cause severe burns if touched.**
- **Keep children away from an operating fireplace. Closely supervise children in any room where a fireplace is operating to prevent contact with glass.**
- **Keep clothing, furniture, gasoline, and other flammable liquids away from the fireplace.**
- **Even after the gas is turned off, fireplace surfaces remain extremely hot.**

☐ Be sure to attach the enclosed **Safety-in-Operation Warnings** where you turn on your fireplace, to help remind everyone of the dangers associated with high temperatures *(**Page 51**)*.

☐ Read **Important Safety Information** *(**Page 5**)*.

[ENGLISH]

La sécurité et votre foyer

Toutes les parties de votre foyer IHP deviennent EXTRÊMEMENT CHAUDES !

☐ Afin d'éviter les brûlures graves ou les blessures, ne pas retirer l'écran de protection de la foyer qui empêche tout contact direct avec la vitre.

☐ Suivez les instructions de sécurité ci-dessous et veillez à ce que tous les membres de votre famille soient conscients du danger de brûlure encouru :

- **Les surfaces de votre foyer deviennent EXTRÊMEMENT CHAUDES !**
- **La vitre située à l'avant du foyer atteint des températures EXTRÊMEMENT ÉLEVÉES et peut causer de graves blessures en cas de contact.**
- **Tenez les enfants à l'écart du foyer lorsqu'il fonctionne. Surveillez attentivement les enfants dans les pièces où un foyer est utilisé afin d'éviter qu'ils ne soient en contact avec la vitre.**
- **Tenez tous les vêtements, les meubles, l'essence et tout autre liquide inflammable à l'écart du foyer.**
- **Même après fermeture du gaz, les surfaces du foyer restent extrêmement chaudes.**

☐ Veillez à coller les **Étiquettes de mise en garde relatives à la sécurité d'utilisation** à l'endroit où vous utilisez le foyer, pour rappeler à tous les utilisateurs les dangers liés aux températures élevées *(**Page 51**)*.

☐ Lisez **L'information de sûreté importante** *(**Page 5**)*.

[FRENCH]

Seguridad y su chimenea

¡Todas las partes de la chimenea IHP se ponen MUY CALIENTES!

☐ Para evitar quemaduras y lesiones graves, no quite el protector de malla o guardia de seguridad que evita el contacto directo con el vidrio.

☐ Siga las instrucciones de seguridad a continuación y asegúrese de que todos en su hogar sepan acerca de este peligro de quemadura:

- **¡Las superficies de la chimenea estarán EXTREMADAMANTE CALIENTES!!**
- **El vidrio delante de la chimenea alcanza temperaturas EXTREMADAMENTE ALTAS y puede causar quemaduras graves si se toca.**
- **Mantenga a los niños alejados de la chimenea en funcionamiento. Supervise en forma cercana a los niños en cualquier cuarto donde haya una chimenea funcionando para impedir el contacto con el vidrio.**
- **Mantenga la ropa, mobiliario, gasolina y otros líquidos inflamables alejados de la chimenea.**
- **Aún después de haber apagado el gas, las superficies de la chimenea permanecen extremadamente calientes.**

☐ Asegúrese de colocar las **Etiquetas de advertencia de seguridad de operación** en el lugar donde enciende la chimenea, para que todos recuerden los peligros asociados con las altas temperaturas *(**Página 51**)*.

☐ Lea **Información importante de seguridad** *(**Página 5**)*.

[SPANISH]

THANK YOU FOR YOUR PURCHASE. WE APPRECIATE YOUR BUSINESS!

Please carefully read and follow all instructions in this manual. Pay special attention to all warnings and safety information. Following these safety, care, and operation instructions will help ensure many years of dependable and enjoyable service from your fireplace.

Please read and understand these instructions before installing, operating, or servicing this product.

⚠ WARNING

LIFTING HAZARD
SINGLE - PERSON LIFT COULD CAUSE INJURY.
USE ASSISTANCE WHEN MOVING OR LIFTING

NATIONAL FIREPLACE INSTITUTE NFI CERTIFIED www.nficertified.org

We recommend that our gas hearth products be installed and serviced by professionals who are certified in the U.S. by the National Fireplace Institute® (NFI) as NFI Gas Specialists.

General Information
Safety and Your Fireplace....2
Important Safety Information....5
Fireplace Installation, Operation, and Maintenance Notices....6
Packaging List....8
Introduction....8
Gas Pressure....9
Requirements for the Commonwealth of Massachusetts....11
Cold Climate Insulation....11
Manufactured Home Requirements....12
Location....12
Vent Termination Clearances....13
Minimum Clearances to Combustibles....15
Wall Finishes / Surrounds / Mantels....16
Installation Preparation....16
Installation
Installation Sequence....17
Construct the Fireplace Framing....17
Prepare the Fireplace Top Spacers....19
Route the Gas Supply Line to the Fireplace....19
Determine Vent Setup in the Combination Venting Unit....20
Install Non-Combustible Front Fireboard Standoff and Header Shield....20
Rough in the Electrical Supply, if Needed....21
Place the Fireplace in the Framing and Secure....21
Install the Non-Combustible Fireboard....21
(Optional Accessory) Install The Rock/Stone Stop Kit, if applicable....21
Vent System Preparation....22
Install Vent Restrictor....23
Install Elbow Heat Shield....25
Install the Vent System....27
Complete the Field Wiring....40
Connect the Gas Line....43
Verify Proper Fireplace Operation....44
Initialize Remote Control (DRT4200-E series only)....45
Install the Firebox Liners. (Required on DRT4200-E models)....46
Install the Logs, Volcanic Stone, and Glowing Embers....46
Install the Glass Door....46
Adjust the Air Shutter to Ensure Proper Flame Appearance....46
Install the Hood....48
Required Accessory: Facade Installation and Barrier Replacement....48
Install the Finishing Materials....50
Attach the Safety-in-Operation Warnings....50
Installation Accessories....52
Gas Conversion Kits....54
Operation
Operation....55
Maintenance....66
Accessory Components....69
Lighting Instructions....72
Troubleshooting....76
Replacement Parts....77
Warranty....80

IMPORTANT SAFETY INFORMATION

Important Safety Information

1. **WARNING: Do not operate appliance with the glass front removed, cracked or broken.**
2. **Do not use this appliance if any part has been under water. Immediately call a qualified service technician to inspect the appliance and to replace any part of the control system and any gas control which has been under water.**
3. **Due to high temperatures, the appliance should be located out of traffic and away from furniture and draperies.**
4. **Children and adults should be alerted to the hazards of high surface temperature and should stay away to avoid burns or clothing ignition.**
5. **Clothing or other flammable material should not be placed on or near the appliance.**
6. **Young children should be carefully supervised when they are in the same room as the appliance. Toddlers, young children, and others may be susceptible to accidental contact burns. A physical barrier is recommended if there are at-risk individuals in the house. To restrict access to a fireplace or stove, install an adjustable safety gate to keep toddlers, young children, and other at-risk individuals out of the room and away from hot surfaces.**
7. **Any safety screen, guard or barrier removed for servicing an appliance must be replaced prior to operating the appliance.**
8. **Installation and repair should be done by a qualified service person. The appliance should be inspected before use and at least annually by a professional service person. More frequent cleaning may be required due to excessive lint from carpeting, bedding material, et cetera. It is imperative that control compartments, burners, and circulating air passageways of the appliance be kept clean. See maintenance instructions on *Page 66*.**

[English]

L'information de sûreté importante

1. **AVERTISSEMENT. Ne pas utiliser l'appareil si le panneau frontal en verre n'est pas en place, est craqué ou brisé.**
2. **Ne pas se servir de cet appareil s'il a été plongé dans l'eau, même partiellement. Faire inspecter l'appareil par un technicien qualifié et remplacer toute partie du systéme de contrôle et toute commande qui ont été plongées dans l'eau.**
3. **En raison des températures élevées, l'appareil devrait être installé dans un endroit où il y a peu de circulation et loin du mobilier et des tentures.**
4. **Les enfants et les adultes devraient être informés des dangers que posent les températures de surface élevées et se tenir à distance afin d'éviter des brûlures ou que leurs vêtements ne s'enflamment.**
5. **On ne devrait pas placer de vêtements ni d'autres matières inflammables sur l'appareil ni à proximité.**
6. **Les jeunes enfants devraient être surveillés étroitement lorsqu'ils se trouvent dans la même pièce que l'appareil. Les tout petits, les jeunes enfants ou les adultes peuvent subir des brûlures s'ils viennent en contact avec la surface chaude. Il est recommandé d'installer une barrière physique si des personnes à risques habitent la maison. Pour empêcher l'accès à un foyer ou à un poêle, installez une barrière de sécurité ; cette mesure empêchera les tout petits, les jeunes enfants et toute autre personne à risque d'avoir accès à la pièce et aux surfaces chaudes.**
7. **Tout écran ou protecteur retiré pour permettre l'entretien de l'appareil doit être remis en place avant de mettre l'appareil en marche.**
8. **L'installation et la réparation devrait être confiées à un technicien qualifié. L'appareil devrait faire l'objet d'une inspection par un technicien professionnel avant d'être utilisé et au moins une fois l'an par la suite. Des nettoyages plus fréquents peuvent être nécessaires si les tapis, la literie, et cetera produisent une quantité importante de poussière. Il est essentiel que les compartiments abritant les commandes, les brûleurs et les conduits de circulation d'air de l'appareil soient tenus propres. Voyez les instructions d'entretien à la *Page 66*.**

[French]

Información importante de seguridad

1. **ADVERTENCIA: No opere el artefacto con el frente de vidrio quitado, agrietado o roto.**
2. **No use este artefacto si alguna de sus partes ha estado bajo agua. Llame de inmediato a un técnico de servicio calificado para que inspeccione el artefacto y reemplace cualquier parte del sistema de control y cualquier control de gas que haya estado bajo agua.**
3. **Debido a las altas temperaturas, el artefacto debe situarse fuera de las áreas de tráfico y lejos del mobiliario y cortinas.**
4. **Se debe alertar a los niños y adultos sobre los peligros de las altas temperaturas en la superficie y que se mantengan alejados para evitar quemaduras o ignición de la ropa.**
5. **No debe colocarse ropa u otros materiales inflamables sobre y cerca del artefacto.**
6. **Se debe supervisar de cerca a los niños cuando estén en el mismo cuarto que el artefacto. Los niños pequeños, los jóvenes y otras personas pueden ser susceptibles a quemaduras por contacto accidental. Se recomienda instalar una barrera física si hay personas en riesgo en la casa. Para restringir el acceso a una chimenea o estufa, instale una puerta de seguridad ajustable para mantener a los niños pequeños, jóvenes y otras personas en riesgo fuera del cuarto y lejos de las superficies calientes.**
7. **Cualquier malla o resguardo de seguridad quitado para dar servicio a un artefacto, debe reinstalarse antes de operar el artefacto.**
8. **Una persona de servicio competente debe realizar la instalación y reparación. Una persona de servicio profesional debe inspeccionar el artefacto antes de usar al menos una vez por año. Se puede requerir limpieza más frecuente debido a la pelusa excesiva del alfombrado, del material de cobijas, etc. Es imprescindible mantener limpios los compartimientos de control, los quemadores y los pasajes de circulación del aire del artefacto. Ver las instrucciones de mantenimiento en la *página 66*.**

[Spanish]

APPLIANCE INSTALLATION, SERVICE, AND MAINTENANCE NOTICES

⚠ WARNING

Improper installation, adjustment, alteration, service or maintenance can cause injury or property damage. Refer to this manual. For assistance or additional information consult a qualified installer, service agency or the gas supplier.

⚠ AVERTISSEMENT

Une installation, un réglage,une modification, une réparation ou un entretien mal effectué peut causer des dommages matériels ou des blessures. Voir la notice de l'utilisateur qui accompagne l'appareil. Pour de l'aide ou des renseignements supplémentaires, consultez un installateur, un technicien agréé ou le fournisseur de gaz.

Only trim kit(s) supplied by the manufacturer shall be used in the installation of this fireplace.
Seules des portes certifiées pour cet appareil doivent être utilisées.

These appliances must not be connected to a chimney or flue serving a separate solid fuel burning appliance.

Any change to this appliance and/or its operating controls is dangerous. Improper installation or use of this appliance can cause serious injury or death from fire, burns, explosion or carbon monoxide poisoning.

CARBON MONOXIDE POISONING: Early signs of carbon monoxide poisoning are similar to the flu with headaches, dizziness and/or nausea. If you have these signs, obtain fresh air immediately. Turn off the gas supply to the appliance and have it serviced by a qualified professional, as it may not be operating correctly. Some people are more affected by carbon monoxide than others, including pregnant women, people with heart or lung disease or anemia, those under the influence of alcohol, and those at high altitudes.

Turn off gas and electrical power to the appliance and allow it to cool before cleaning or servicing the appliance.

If the barrier becomes damaged, the barrier shall be replaced with the manufacturer's barrier for this appliance.
Si l'écran est endommagé, il doit être remplacé par celui fournit par le fabricant de cet appareil.

For use with Vista Facades / barriers Part No(s). F5026 (40" Models), and F5027 (45" Models). Follow installation instructions.

Also, for use with Reflection and Craftsman Premium Facades / barriers found on *Page 71*.

Reinstall any barrier removed before operating the appliance. The barrier is designed to reduce the risk of burns from hot glass. Do not operate the appliance without the barrier installed.

APPLIANCE OPERATION NOTICES

These fireplaces are vented gas appliances. Do not burn wood or other material in these appliances.

These appliances are designed to operate on natural gas or propane gas only. The use of other fuels or combinations of fuels will degrade the performance of this system and may be dangerous.

Provide adequate clearances around air openings and adequate accessibility clearance for service and proper operation. Never obstruct the front openings of the appliance.

These appliances are designed as supplemental heaters. Therefore, it is advisable to have an alternate primary heat source when installed in a dwelling.

WARRANTY INFORMATION

Your gas appliance is covered by a limited 20-Year warranty. You will find a copy of the warranty accompanying this manual. Please read the warranty to be familiar with its coverage.

Retain this manual. File it with your other documents for future reference.

Failure to comply with the installation and operating instructions provided will result in an improperly installed and operating appliance, voiding its warranty.

Do not attempt to alter or modify the construction of the appliance or its components. Any modification or alteration may void the warranty, certification, and listings of this unit.

IMPORTANT SAFETY AND WARNING INFORMATION

⚠ CAUTION

Hot while in operation. Do not touch. Severe Burns may result. Keep children, clothing furniture, gasoline and other liquids having flammable vapors away.

⚠ ATTENTION

L'appareil est chaud lorsqu'il fonctionne. Ne pas toucher l'appareil. Risque de brûlures graves. Surveiller les enfants. Garder les vêtements, les meubles, l'essence ou autres liquides produisant des vapeur inflammables loin de l'appareil.

⚠ WARNING

This product can expose you to chemicals including Carbon Black, which is known to the State of California to cause cancer, and Carbon Monoxide, which is known to the State of California to cause birth defects or other reproductive harm. For more information go to www.P65Warnings.ca.gov

⚠ WARNING

Never connect this appliance to private (non-utility) gas wells. This gas is commonly known as wellhead gas and does not have odorants and may have impurities, and variations in BTU content. The use of well-head gas will void the manufacturer's warranty to this appliance.

INSTALLATION

PACKAGING LIST

All models include

The assembled vented gas fireplace heater is packaged with:

- Literature Kit (envelope in bottom compartment containing Installation and Operation Instructions (this manual), Hot Glass Safety Flyer, and Safety-In-Operation Warning Labels)
- 2 Vent Restrictors (attached to Literature Kit bag)
- 2 Vent Cover Plates
- Remote Control and Receiver (DRT4200-E models only)
- Log Set (packaged in a carton inside the firebox)
- Volcanic Stone—1 bag (in bottom compartment)
- Glowing Embers—1 bag (in bottom compartment)
- 1 Non-combustible board, 2 side brackets, and 1 center bracket
- Elbow Heat Shield (2 for DRT4000 models, 1 for DRT4200 models)
- Header Heat Shield
- 15 feet of two conductor wire (DRT4000-E models only)

INTRODUCTION

These vented gas fireplace heaters are sealed combustion, air-circulating gas fireplaces designed for residential and commercial applications.

Fireplaces are designed with an electronic intermittent pilot ignition system. External electrical power is required to operate these units. In the event of a power outage, four (4) **AA** batteries (in battery holder) provide backup power for fireplace operation (excluding the blower).

NOTE: Installation and repair should be done by a qualified service person. The fireplace should be inspected before use and at least annually by a professional service person. More frequent cleaning may be required due to excessive lint from carpeting, bedding material, etcetera. It is imperative that control compartments, burners and circulating air passageways of the fireplace be kept clean.

Remarqué : L'installation et la réparation devrait être confiées à un technicien qualifié. L'appareil devrait faire l'objet d'une inspection par un technicien professionnel avant d'être utilisé et au moins une fois l'an par la suite. Des nettoyages plus fréquents peuvent être nécessaires si les tapis, la literie, et cetera produisent une quantité importante de pous-sière. Il est essentiel que les compartiments abritant les commandes, les brûleurs et les conduits de circulation d'air de l'appareil soient tenus propres.

NOTE: Diagrams and illustrations are not necessarily shown to scale.

Approved Vent Components

These fireplaces are designed, tested and listed for operation and installation with the following vent components only:

- Secure Vent® Direct-Vent System Components,
- Secure Flex® Flexible Vent Components, and
- Z-FLEX® Model GA Venting Systems listed to UL1777 and ULCS635 manufactured by Flexmaster Canada Limited.

Use only the correct size venting (4-1/2" inner and 7-1/2" outer).

These approved vent system components are labeled for identification. DO NOT use any other manufacturer's vent components with these fireplaces.

Codes and Standards

These fireplaces comply with National Safety Standards and are tested and listed by PFS TECO (Report No. 16-120) to ANSI Z21.88 (in Canada, CSA-2.33), and CSA 2.17:17 (R2022) in both USA and Canada, as vented gas fireplace heaters.

These fireplaces are listed for installation in bedrooms and manufactured homes.

The installation must conform to local codes or, in the absence of local codes, with the National Fuel Gas Code, ANSI Z223.1/NFPA 54—latest edition (In Canada, the current CAN/CGA-B149.1 installation code).

The fireplace, when installed, must be electrically grounded and wired in accordance with local codes or, in the absence of local codes, with the National Electrical Code, ANSI/NFPA 70—latest edition, or the Canadian Electrical Code, CSA C22.1—latest edition.

BTU Input

Table 1 - Input Rate (BTU/HR), Gas Valves

Models	Natural Gas		Propane Gas	
	High Rate	Low Rate	High Rate	Low Rate
DRT4040-E	28,000	20,000	25,000	18,000
DRT4240-E	36,000	24,000	31,000	21,000
DRT4045-E	31,000	21,000	31,000	20,000
DRT4245-E	42,000	25,000	41,000	22,000

Table 2 - Thermal Efficiency (%)

Model	P4 **	
	Natural Gas	Propane Gas
DRT4040-E	57.1	58.6
DRT4240-E	62.4	62.9
DRT4045-E	59.6	62.8
DRT4245-E	62.7	62.4

Canada
ENERGUIDE
Look for the **EnerGuide** Gas Fireplace Energy Efficiency Rating in the brochure
Based on CSA P.4.1:24

**** Complies with CSA P.4.1:24 "Testing Method for Measuring Annual Fireplace Efficiency." P4 (EnerGuide) is a measurement of the Canadian Office of Energy Efficiency.**

Efficiencies are based on Normal input operation.

NOTE: CPI disabled per addendum Instructions 900949-00 (provided with this appliance).

Gas Pressure

Table 3 - Inlet Line Gas Pressures

Fuel	Minimum	Maximum
Natural Gas	5" WC (1.25 kPa)	10.5" WC (2.61 kPa)
Propane	11.0" WC (2.74 kPa)	13.0" WC (3.23 kPa)

Table 4 - Manifold Outlet Gas Supply Pressure

Fuel	Pressure
Natural Gas	3.5" WC (0.87 kPa)
Propane	10.0" WC (2.49 kPa)

Test gauge connections are provided on the front of the gas control valve (identified IN for the inlet and OUT for the manifold side). The control valves have a 3/8" (10 mm) NPT thread inlet and outlet side of the valve *(**Figures 1A & 1B**)*.

Figure 1A - Electronic Gas Valve PF2 (DRT4200-E)

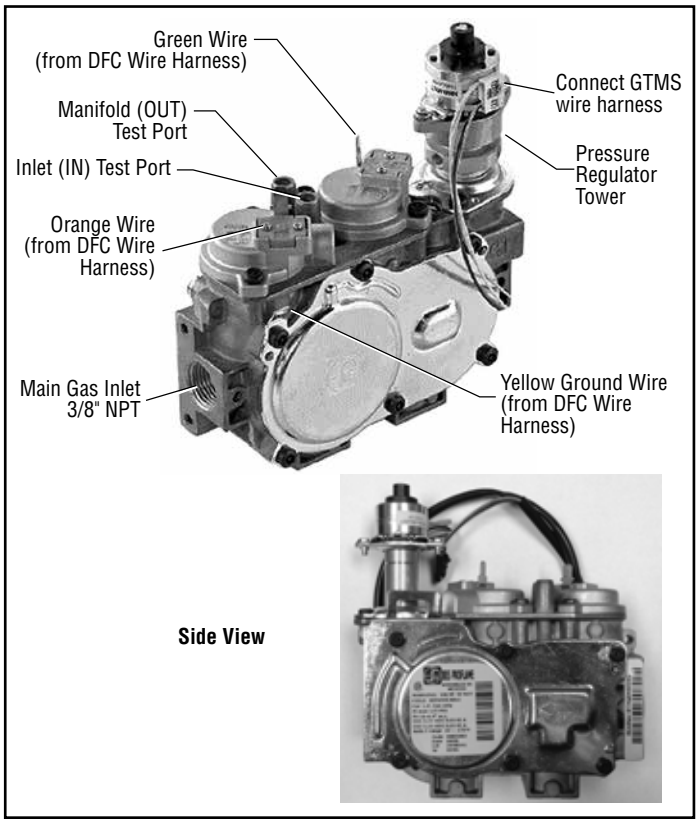

Figure 1B - Electronic Gas Valve PF1 (DRT4000-E)

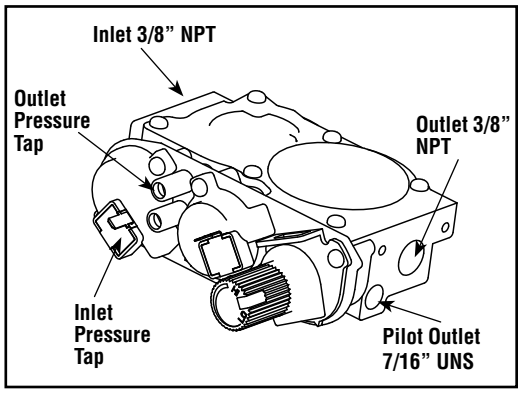

Propane tanks are at pressures that will cause damage to valve components. Verify that the tanks have step down regulators to reduce the pressure to safe levels.

The appliance and its appliance main gas valve must be disconnected from the gas supply piping system during any pressure testing of that system at test pressures **in excess of** 1/2 psi (3.5 kPa).

The appliance must be isolated from the gas supply piping system by closing its equipment shutoff valve during any pressure testing of the gas supply piping system at test pressures **equal to or less than** 1/2 psi (3.5 kPa).

Orifice Sizes—Sea Level to High Altitude

These fireplaces are tested and approved for installation at elevations of 0–4500 ft (0–1372 m) above sea level using the standard burner orifice sizes *(**Table 5**)*. For elevations above 4500 ft, contact your gas supplier or qualified service technician.

Table 5 - Burner Orifice Sizes, Elevation 0–4500 ft (0–1372 m)

BURNER ORIFICE KITS (0 - 4500 ft - 0 - 1372 m)				
Model	**Natural Gas - REAR Orifice ***	**Natural Gas - FRONT Orifice***	**Propane - REAR Orifice***	**Propane - FRONT Orifice***
DRT4040-E	Cat. No. H3721 (#42, 0.0935”)	Cat. No. 19L52 (#55, 0.052”)	Cat. No. 19L52 (#55, 0.052”)	Cat. No. F2928 (#70, 0.028”)
DRT4045-E	Cat. No. F2927 (#41, 0.096”)	Cat. No. 19L52 (#55, 0.052”)	Cat. No. 19L52 (#55, 0.052”)	Cat. No. F2928 (#70, 0.028”)
DRT4240-E	Cat. No. 99K76 (#38, 0.1015”)	Cat. No. LB-55874D (#51, 0.067”)	Cat. No. 19L52 (#55, 0.052”)	Cat. No. 35M91 (#61, 0.039”)
DRT4245-E	Cat. No. 21L8001 (#35, 0.110”)	Cat. No. LB-55874D (#52, 0.0635”)	Cat. No. 37G00 (#52, 0.0635”)	Cat. No. 35M91 (#61, 0.039”)

*** Standard size installed at factory**

Deration

At elevations above 4500 ft, the amount of BTU fuel value delivered must be reduced by either:

- Using gas that has been derated by the gas company.
- Changing the burner orifice to a smaller size as regulated by the local authorities having jurisdiction and by the (USA) National Fuel Gas Code NFPA 54/ANSI Z223.1—latest edition or, in Canada, the CAN/CGA-B149.1 codes—latest edition.

NOTE: Flame breadth, height and width will diminish 4% for every 1,000 ft of altitude.

IN CANADA—CSA 2.17:17 (R2022) (HIGH ALTITUDE):

THE CONVERSION SHALL BE CARRIED OUT BY A MANUFACTURER’S AUTHORIZED REPRESENTATIVE, IN ACCORDANCE WITH THE REQUIREMENTS OF THE MANUFACTURER, PROVINCIAL OR TERRITORIAL AUTHORITIES HAVING JURISDICTION AND IN ACCORDANCE WITH THE REQUIREMENTS OF THE CAN/CGA-B149.1 OR CAN/CGA-B149.2 INSTALLATION CODES.

COMMONWEALTH OF MASSACHUSETTS REQUIREMENTS

These appliances are approved for installation in the US state of Massachusetts if the following additional requirements are met:

- Install this appliance in accordance with Massachusetts Rules and Regulations 248 C.M.R. Sections 4.00 through 8.00.
- Installation and repair must be done by a plumber or gas fitter licensed in the Commonwealth of Massachusetts.
- The flexible gas line connector used shall not exceed 36 inches (92 centimeters) in length.
- The individual manual shut-off must be a T-handle type valve.

Massachusetts Horizontal Vent Requirements

In the Commonwealth of Massachusetts, horizontal terminations installed less than seven (7) feet above the finished grade must comply with the following additional requirements:

- A hard wired carbon monoxide detector with an alarm and battery back-up must be installed on the floor level where the gas fireplace is installed. The carbon monoxide detector must comply with NFPA 720, be ANSI/UL 2034 listed and be ISA certified.

- A metal or plastic identification plate must be permanently mounted to the exterior of the building at a minimum height of eight (8) feet above grade and be directly in line with the horizontal termination. The sign must read, in print size no less than one-half (1/2) inch in size, **GAS VENT DIRECTLY BELOW. KEEP CLEAR OF ALL OBSTRUCTIONS**.

COLD CLIMATE INSULATION

For cold climate installations, seal all cracks around your fireplace with noncombustible material and wherever cold air could enter the room. It is especially important to insulate outside chase cavity between studs and under floor on which fireplace rests, if floor is above ground level. Gas line holes and other openings should be caulked or stuffed with unfaced fiberglass insulation.

NOTE: Do not use loose, or blown-in insulation in the cavity surrounding the fireplace.

If the fireplace is being installed on a cement slab in cold climates, a sheet of plywood or other raised platform can be placed underneath to prevent conduction of cold transferring to the fireplace and into the room. It also helps to seal inside surfaces and tape for maximum air tightness and caulk firestops.

MANUFACTURED HOME REQUIREMENTS

This appliance may be installed in an aftermarket, permanently located, manufactured home (USA only) or mobile home, where not prohibited by local codes.

Cet appareil peut être installé dans une maison préfabriquée (mobile) déjà installée à demeure si les règlements locaux le permettent.

This appliance is only for use with the type of gas indicated on the rating plate. This appliance is not convertible for use with other gases, unless a certified kit is used.

Cet appareil doit être utilisé uniquement avec le type de gaz indiqué sur la plaque signalétique. Cet appareil ne peut être converti à d'autres gaz, sauf si une trousse de conversion est utilisée.

⚠ CAUTION

Ensure that the cross members are not cut or weakened during installation. The structural integrity of the manufactured home floor, wall, and ceiling / roof must be maintained.

⚠ CAUTION

This appliance must be grounded to the chassis of the manufactured home in accordance with local codes or in the absence of local codes, with the National Electrical Code ANSI / NFPA 70—latest edition or the Canadian Electrical Code CSA C22.1—latest edition.

LOCATION

In selecting the location, the aesthetic and functional use of the fireplace are primary concerns. However, vent system routing to the exterior and access to the fuel supply are also important.

Due to high temperatures, the fireplace should be located out of traffic and away from furniture and draperies.

En raison des températures élevées, l'appareil devrait être installé dans un endroit où il y a peu de circulation et loin du mobilier et des tentures.

The location should also be free of electrical, plumbing or other heating/air conditioning ducting.

These direct-vent fireplaces are uniquely suited for installations requiring a utility shelf positioned directly above the fireplace. Utility shelves like these are commonly used for locating television sets and decorative plants.

Be aware that this is a heat producing fireplace. Objects placed above the unit are exposed to elevated temperatures. Do not insulate the space between the fireplace and the area above it.

The minimum height from the base of the fireplace to the underside of combustible materials used to construct a utility shelf in this fashion is shown in ***Table 9, Page 15***.

Figure 2 - Typical Locations and Venting

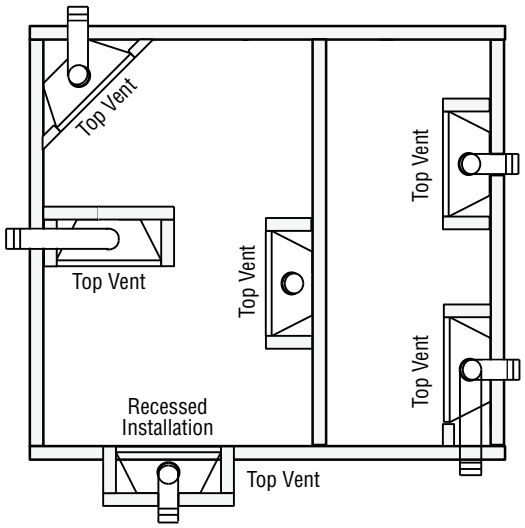

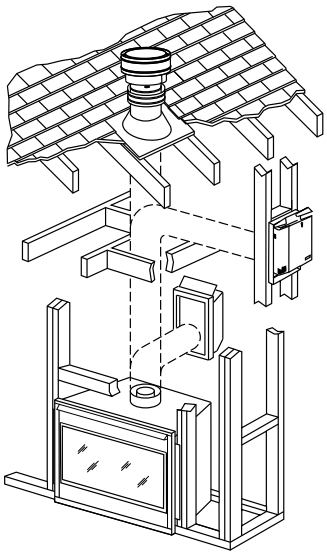

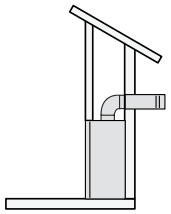

Horizontal Vent (Top Vent)

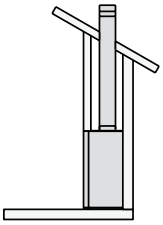

Vertical Vent (Top Vent)

***NOTE**: Installations against side walls must meet requirements shown in **Figure 5, Page 16**.*

VENT TERMINATION CLEARANCES

These instructions should be used as a guideline and do not supersede local codes in any way. Install venting according to local codes, these instructions, the current National Fuel Gas Code (ANSI Z223.1/NFPA 54) in the USA or the current standards of CAN/CGA-B149.1 in Canada.

Vertical Vent Termination Clearances

Terminate multiple vent terminations according to the installation codes listed above and ***Figure 3***.

Figure 3 - Multiple Terminations

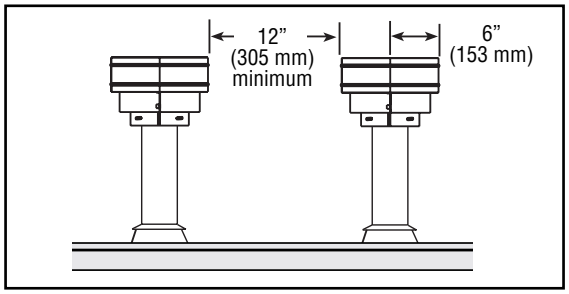

Terminate single vent caps relative to building components according to ***Table 6***.

Table 6 - Termination Heights for Vents above Flat or Sloped Roofs (NFPA 54 / ANSI Z223.1)—Gas Vent Rule

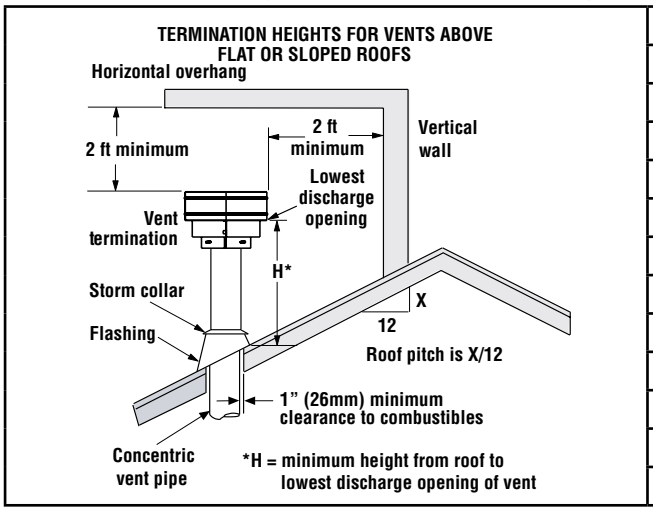

Roof Pitch	Termination Height *
Flat to 6/12	1.0 ft (0.3 m)
6/12 to 7/12	1.25 ft (0.38 m)
7/12 to 8/12	1.5 ft (0.46 m)
8/12 to 9/12	2.0 ft (0.61 m)
9/12 to 10/12	2.5 ft (0.76 m)
10/12 to 11/12	3.25 ft (0.99 m)
11/12 to 12/12	4.0 ft (1.22 m)
12/12 to 14/12	5.0 ft (1.52 m)
14/12 to 16/12	6.0 ft (1.83 m)
16/12 to 18/12	7.0 ft (2.13 m)
18/12 to 20/12	7.5 ft (2.29 m)
20/12 to 21/12	8.0 ft (2.44 m)

Horizontal Vent Termination Clearances

The horizontal vent termination must have a minimum of 6” (152 mm) clearance to any overhead combustible projection of 2-1/2” (64 mm) or less ***(Figure 4)***. For projections exceeding 2-1/2” (64 mm) ***(Figure 4)***. For additional vent location restrictions refer to ***Table 7, Page 14***.

All horizontal terminations may be located as close as 6” (152mm) to any (non-combustible and combustible) exterior sidewall. This distance may be decreased to 2” (51mm) for noncombustible exterior sidewalls with all approved terminations ***(Table 7, Page 14)***.

Figure 4 - Horizontal Vent Termination Clearances

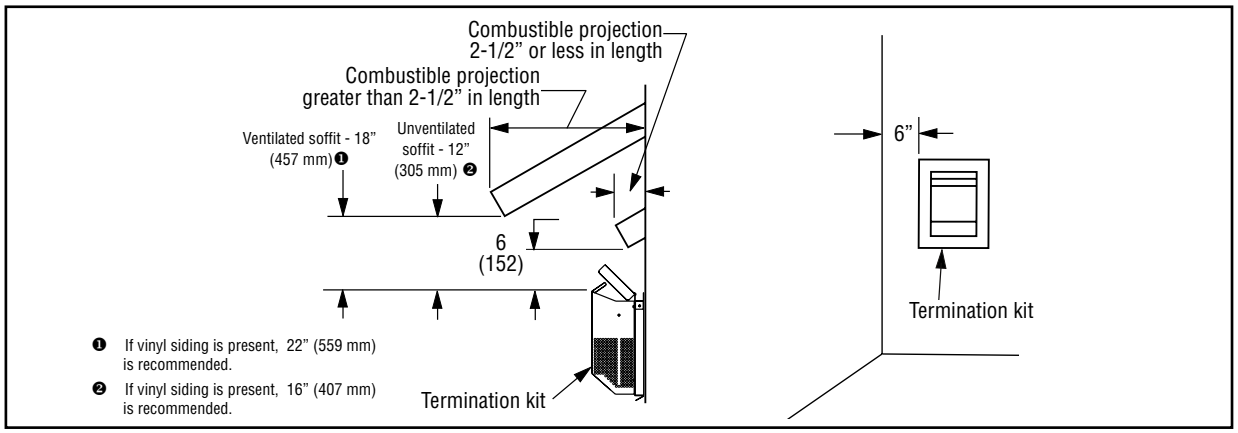

Table 7 - Horizontal vent termination clearances for buildings with combustible and noncumbustible exteriors

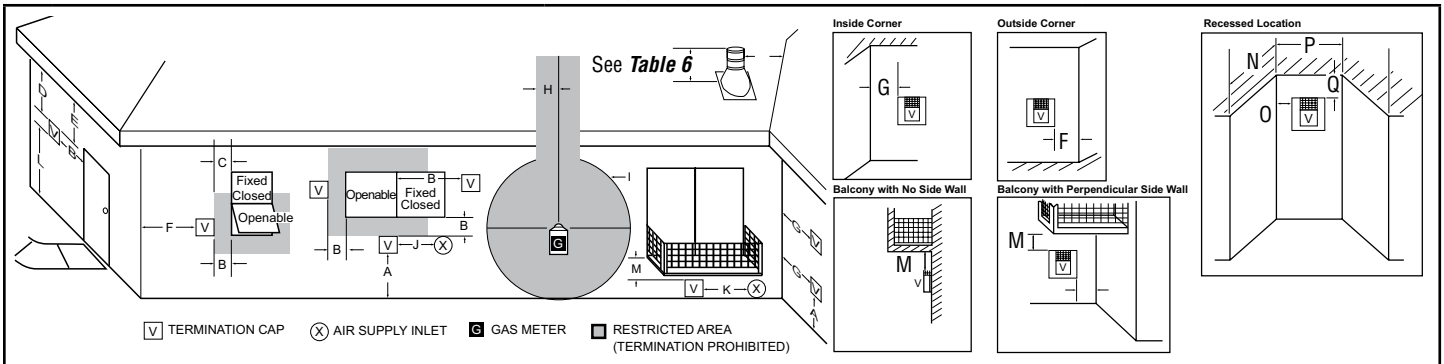

		U.S. Installation **	Canadian Installation *
A	Clearance above grade, veranda, porch, deck, or balcony	12” (300 mm) **	12” (300 mm) *
B	Clearance to window or door that may be opened	6” (150 mm) for fireplaces < 10,000 Btu/h (3 kW), 9” (230 mm) for fireplaces > 10,000 Btu/h (3 kW), and < 50,000 Btu/h (15 kW), 12” (300 mm) for fireplaces > 50,000 Btu/h (15 kW) **	6” (150 mm) for fireplaces < 10,000 Btu/h (3 kW), 12” (300 mm) for fireplaces > 10,000 Btu/h (3 kW)
C	Clearance to permanently closed window	9” (229 mm) recommended to prevent window condensation	12” (305 mm) recommended to prevent window condensation
D	Vertical clearance to ventilated soffit located above the termination within a horizontal distance of 18” (458 mm)	18” (458 mm)	18” (458 mm)
E	Clearance to unventilated soffit	12” (305 mm)	12” (305 mm)
F	Clearance to outside corner	5” (127 mm) minimum	5” (127 mm) minimum
G	Clearance to inside corner	6” (152 mm) minimum	6” (152 mm) minimum
H	Clearance to each inside of center line extended above meter / regulator assembly	36” (910 mm) within a height of 15 ft above the meter / regulator assembly **	36” (910 mm) within a height of 15 ft above the meter / regulator assembly *
I	Clearance to service regulator vent outlet	36” (910 mm)**	36” (910 mm)*
J	Clearance to nonmechanical air supply inlet to building or the combustion air inlet to any other fireplace	6” (150 mm) for fireplaces < 10,000 Btu/h (3 kW), 9” (230 mm) for fireplaces > 10,000 Btu/h (3 kW) and < 50,000 Btu/h (15 kW), 12” (300 mm) for fireplaces > 50,000 Btu/h (15 kW)**	6” (150 mm) for fireplaces < 10,000 Btu/h (3 kW), 12” (300 mm) for fireplaces > 10,000 Btu/h (3 kW)
K	Clearance to a mechanical air supply inlet	36” (910 mm) above if within 10 ft (3 m) horizontally **	72” (1830 mm) *
L	Clearance above paved sidewalk or paved driveway located on public property	84” (2130 mm) ‡	84” (2130 mm) ‡
M	Clearance under veranda, porch, deck or balcony	12” (300 mm) *‡	12” (300 mm) *‡
N	Depth of alcove (maximum)	72” (1830 mm) **	72” (1830 mm) *
O	Clearance to termination (alcove)	6” (15.2 mm) **	6” (15.2 mm)*
P	Width of alcove (minimum)	36” (910 mm) **	36” (910 mm) *
Q	Clearance to combustible above (alcove)	18” (457 mm) **	18” (457 mm) *

* In accordance with the current CAN/CGA-B149.1 National Gas And Propane Installation Code

** In accordance with the current ANSI Z223.1/NFPA 54 National Fuel Gas Codes

‡ A vent shall not terminate directly above a sidewalk or paved driveway which is located between two single family dwellings and serves both dwellings

*‡ Only permitted if veranda, porch, deck, or balcony is fully-open on a minimum two sides beneath the floor

MINIMUM CLEARANCES TO COMBUSTIBLES

Fireplace And Vent Clearances

The fireplace is approved with zero clearance to combustible materials on all sides *(**Table 8**)*, with the following exception: The unit may not be recessed (allowance made for mantel legs / side trim in ***Figure 5, Page 16***). When the unit is installed with one side flush with a wall, the wall on the other side of the unit must not extend beyond the front edge of the unit *(**Figure 5, Page 16**)*.

Table 8 - Minimum Clearances *

Back	1-1/2” (38mm) to wrapper; 0” (0 mm) to Spacers
Sides	1/2” (13 mm) to wrapper 0” (0 mm) to Spacers **
Top Standoffs	0” (0 mm) to top standoffs
Floor	0” (0 mm)
From Bottom of Unit to Ceiling	64” (1626 mm)
Vent	3” (77 mm)—Top * 1” (26 mm)—Sides and Bottom
Front Service Clearance— clearance immediately in front of viewing area(s)	36” (914 mm)

*** 3” (77 mm) above any horizontal/inclined vent component.**

**** See *Page 21* for clearance requirements to the nailing flange located at each side of the unit and any screw heads adjacent to it.**

The fireplace must be mounted on a fully supported base extending the full width and depth of the unit. The fireplace may be located on or near conventional construction materials. However, if installed on combustible materials, such as carpeting, vinyl tile or other combustible material other than wood flooring, the appliance shall be installed on a metal or wood panel extending the full width and depth of the appliance.

Hearth Extension

A hearth extension is not required with this fireplace. If a hearth extension is used, do not block the lower control compartment door. Any hearth extension used is for appearance only and does not have to conform to standard hearth extension installation requirements.

Shelf Height

For top vent models, the venting attached to the top vent should be routed in a way to minimize obstructions to the space above the fireplace. Do not insulate the space between the fireplace and the area above it *(**Table 9**)*. The minimum height from the base of the fireplace to the underside of combustible materials used to construct a utility shelf in this fashion is shown in ***Table 9***.

Table 9 - Combustible Shelf Height—Top Vent

Model	Top Vent with 90° Elbow ***	
	Secure Vent® (using rigid elbow)	**Secure Flex® (using flex elbow)**
DRT4040-E	52” (1321 mm) *	54” (1372 mm) *
DRT4045-E	52” (1321 mm) *	54” (1372 mm) *
DRT4240-E	68” (1321 mm) *	70” (1372 mm) *
DRT4245-E	68” (1727 mm) *	70” (1778 mm) *

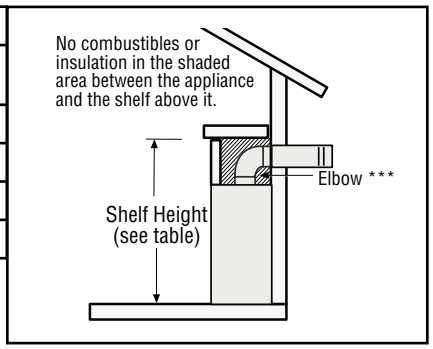

* Includes 3” clearance to combustibles (required above vent components)

*** DRT 4000 series models may connect an elbow directly to the top flue collar. DRT 4200 series models must use, at a minimum, a 1 foot vertical section before connecting an elbow.

Figure 5 - Combustible Side Clearances

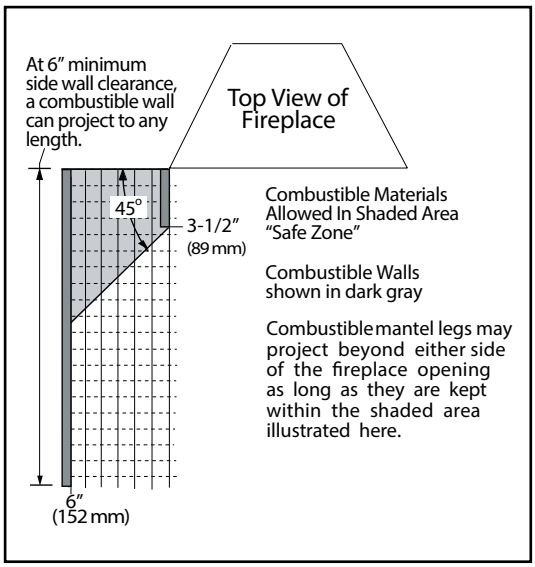

Figure 6 - Mantel Height

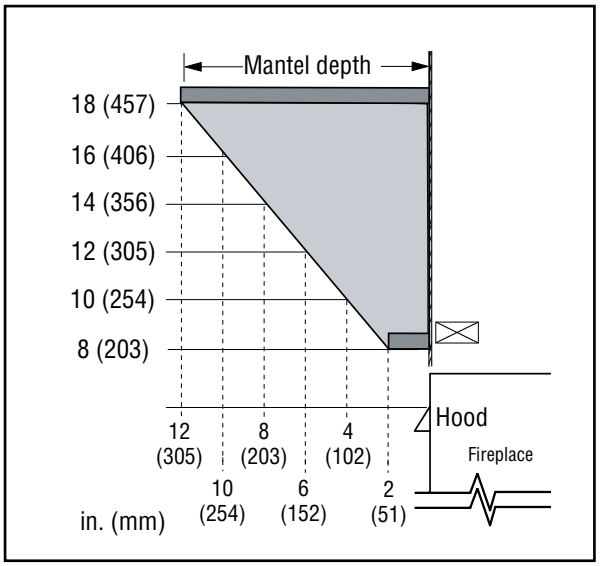

Wall Finishes / Surrounds / Mantels

NOTE: Combustible wall finish materials and/or surround materials must not be allowed to encroach the area defined by the fireplace front face (black sheet metal). **Never allow combustible materials to be positioned in front of or overlapping the fireplace face** ***(Figure 37, Page 50)*****.**

Non-combustible materials, such as surrounds and other fireplace trim, may be installed on the fireplace face, but they must not cover any portion of the removable glass panel or control compartment.

Vertical installation clearances to combustible mantels vary according to the depth of the mantel ***(Figure 6)***. Mantels constructed of non-combustible materials may be installed at any height above the fireplace opening. However, do not allow anything to hang below the fireplace hood.

Minimum clearance requirements include any projections such as shelves, window sills, mantels, etc. above the fireplace.

NOTE: To avoid heat-related finish damage, we recommend the use of high temperature paint (rated 175° F or higher) on the underside of the mantel.

INSTALLATION PREPARATION

The fireplace is shipped with all gas controls and components installed and pre-wired. Before installing the fireplace, follow these steps:

1. Remove the shipping carton, and retain the front of the carton (used to protect the fireplace during construction).
2. Remove the shipping pad, exposing the front glass door.
3. Remove the glass door ***(Pages 64–65)***.

NOTE: Place the glass door on the shipping carton to protect its surface.

4. **IMPORTANT**: Remove the cardboard from beneath each pressure relief plate *(see **Figure 7**)*. To remove, squeeze cardboard and pull down (be careful not to damage the white gasket).

Figure 7

INSTALLATION SEQUENCE

The typical sequence of installation is outlined below; however, each installation is unique and may result in variations to the steps described.

See the pages referenced in the following steps for detailed instructions.

Framing

1. **Construct the Fireplace Framing** ***(Page 17)***.
2. **Prepare the Fireplace Top Spacers** ***(Page 19)***.
3. **Route the Gas Supply Line to the Fireplace** ***(Page 19)***.
4. **Install Non-Combustible Front Fireboard Standoff** ***(Page 20)***
5. **Rough in the Electrical Supply, if Needed** ***(Page 21)***.
6. **Place the Fireplace in the Framing and Secure** ***(Page 21)***.

6A. Install the Non-Combustible Fireboard ***(Page 21)***

6B. (Optional Accessory) Install The Rock/Stone Stop Kit, if applicable ***(Page 21)***

Venting

7. **Select a Horizontal or Vertical Vent System** ***(Page 22)***.
8. **Install the Vent Restrictor (if necessary)** ***(Page 23)***.
9. **Connecting the Vent Pipe** ***(Page 24)***.
10. **Install the Vent System** ***(Page 27)***.

Electrical Connection

11. **Complete the Field Wiring** ***(Page 40)***.

Gas Connection

12. **Connect the Gas Line** ***(Page 43)***.
13. **Verify Proper Fireplace Operation** ***(Page 44)***.

Remote Control

14. **Initialize the Remote Control System for the First Time** ***(Page 45)***

Finishing

15. **Install the Firebox Liners** ***(required on DRT4200-E models, Page 46)***.
16. **Install the Logs, Volcanic Stone, and Glowing Embers** ***(Page 46)***.
17. **Install the Glass Door** ***(Page 46)***.
18. **Adjust the Air Shutter to Ensure Proper Flame Appearance** ***(Page 46)***.
19. **Install the Hood** ***(Page 48)***.
20. **Required Accessory (see** ***Page 71*** **for ordering information): Reinstall the Facade and Barrier** ***(Page 48)***.
21. **Install the Finishing Materials** ***(Page 50)***.
22. **Attach the Safety-in-Operation Warning Labels** ***(Page 50)***.

*

1. Construct the Fireplace Framing

1. Frame the fireplace as illustrated in ***Table 10, Page 18***. For corner framing installations, use ***Table 11, Page 18***.. All framing details must allow for a minimum clearance to combustible framing members as shown in ***Table 8, Page 15***.
2. If the fireplace is to be elevated above floor level, a solid continuous platform must be constructed below the fireplace.

NOTE: Headers may be in direct contact with the fireplace top standoff spacers when they are bent up vertically, maintaining the 4” clearance to the fireplace top, but must not be supported by them or notched to fit around them. All construction above the fireplace must be self-supporting. DO NOT use the fireplace for structural support.

Table 10 - Fireplace Framing Specifications

Model	A *	B	C	D**
DRT4240 Models	40-7/8 (1039)	41-1/4 (1048)	43-3/4 (1111)	23 (585)
DRT4245 Models	45-7/8 (1166)	41-1/4 (1048)	55-3/4 (1417)	23 (585)
DRT4040 Models	40-7/8 (1039)	41-1/4 (1048)	43-3/4 (1111)	23 (585)
DRT4045 Models	45-7/8 (1166)	41-1/4 (1048)	43-3/4 (1111)	23 (585)

C = Minimum height of top vent installations

* Minimum opening size; additional 1/8” per side is recommended.

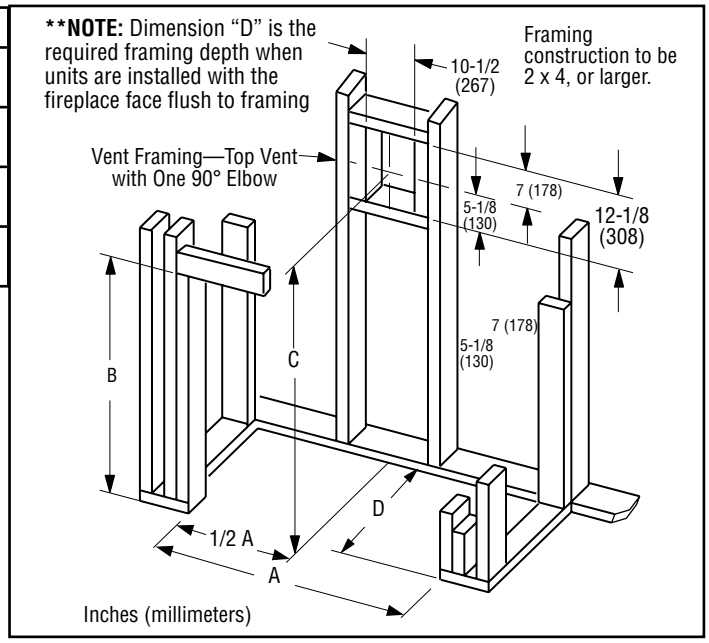

Table 11 - Fireplace Framing Specifications - Corner Installation with Horizontal Termination

Model	A	B	C	D	E
40”	40-7/8 (1039)	78-1/4 (1988)	45-3/8 (1153)	40-1/2 (1029)	15-7/8 (404)
45”	45-7/8 (1166)	85-7/8 (2182)	61 (1550)	40-1/2 (1029)	17-1/2 (445)

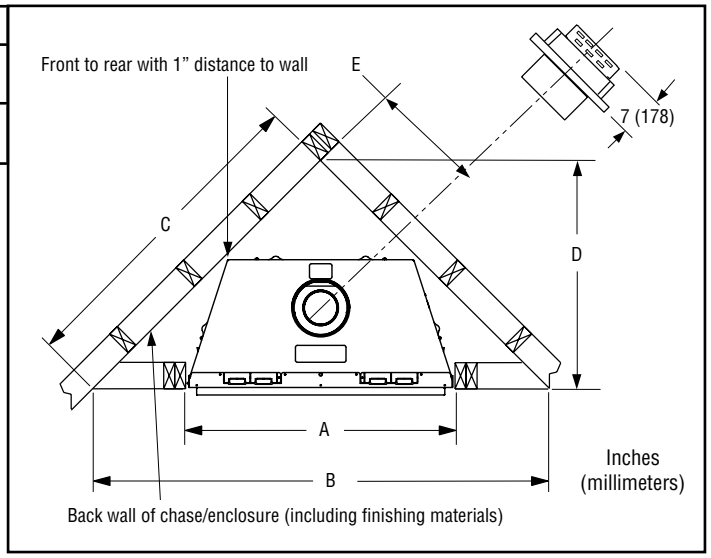

Table 12 - Fireplace Specifications

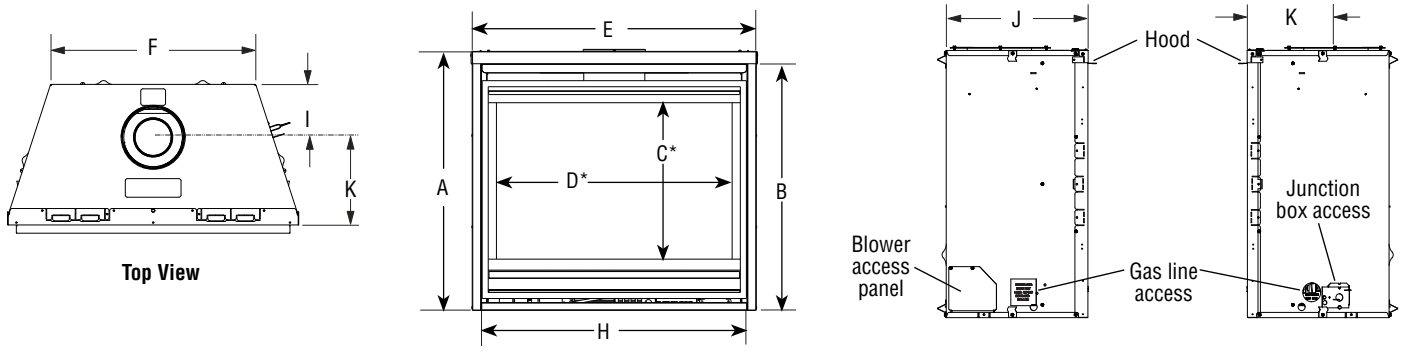

** C and D are glass viewing area dimensions* *Inches (millimeters)*

Model	A	B	C*	D*	E	F	H	I	J	K
40” Models	37-1/8 (943)	34-5/8 (880)	24-1/2 (623)	34-1/4 (870)	40-1/4 (1022)	30 (762)	37-7/8 (962)	6-7/8 (175)	21 (534)	12-3/8 (315)
45”Models	37-1/8 (943)	34-5/8 (880)	24-1/2 (623)	39-1/4 (997)	45-1/4 (1149)	35 (889)	42-7/8 (1089)	6-7/8 (175)	21 (534)	12-3/8 (315)

2. Prepare the Fireplace Top Spacers

1. The two (2) 4” standoff spacers on top of the fireplace cabinet are shipped flat. Remove the screw adjacent to the detached end *(**Figure 8A**)*.
2. Bend the standoffs as shown *(**Figure 8B**)*:
3. Align the hole in the standoff with the hole in the fireplace top, and secure with the screw that was removed in **Step 1** *(**Figure 8B**)*.

Figure 8A - Unassembled standoff

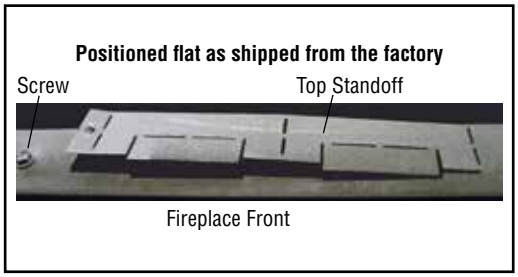

Figure 8B - Assembled standoffs

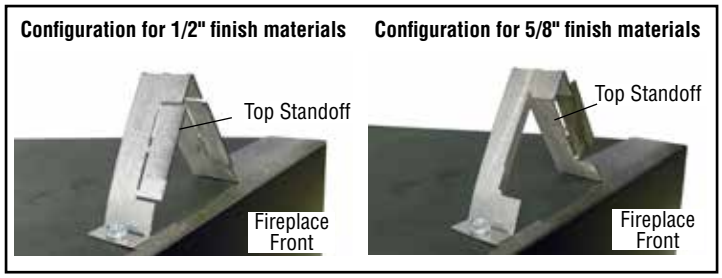

3. Route the Gas Supply Line to the Fireplace

1. Route a 1/2” (13 mm) gas line to the left side of the fireplace *(**Figure 9**)*.

NOTE: Gas lines must be routed, assembled, and made of materials that are in strict accordance with local codes and regulations. All fireplaces are factory-equipped with a flexible gas line connector and a 1/2” shutoff valve *(**Page 43**)*.

Figure 9 - Routing the gas line - 40” and 45” Models

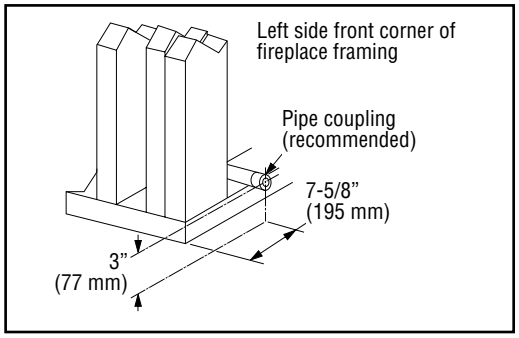

Proper Sizing of Gas Line

Properly size and route the gas supply line from the supply regulator to the area where the appliance is to be installed per requirements outlined in the National Fuel Gas Code, NFPA 54—latest edition (USA) or CAN/CGA-B149.1—latest edition (Canada).

The gas supply line should not be connected to the appliance until **step 13. Connect the Gas Line** *(**Page 43**)*.

NOTE:

- All fireplaces are factory-equipped with a flexible gas line connector and 1/2” shutoff valve *(**Figure 31, Page 43**)*.
- See **Massachusetts Horizontal Vent Requirements** for additional requirements for installations in the state of Massachusetts in the USA.
- A pipe joint compound rated for gas should be used on the threaded joints. Ensure propane-resistant compounds are used in propane applications. Be very careful that the pipe compound does not get inside the pipe.
- A sediment trap in the supply line as close as possible to the fireplace is recommended.
- Check with the local building official for local code requirements (e.g., Are below grade penetrations of the gas line allowed?, etc).

⚠ CAUTION

If propane is used, be aware that with a tank that is too small (i.e., under 100 lbs, if this is the only gas appliance in the dwelling—see NPFA 58), there may be a loss of pressure. This can result in insufficient fuel delivery that can cause sooting, delayed ignition, or other malfunctions. Any damage resulting from an improper installation is not covered by the limited warranty.

4. Installing Non-Combustible Front Fireboard Standoff and Header Shield

A non-combustible standoff board is provided with the fireplace to prevent overlap of drywall or other material of portions of the fireplace that may be prone to the buildup of heat. It is supported by a middle bracket and two side brackets.

Figure 11

Separate and note metal side (2) and center (1) brackets.

Step 1: Remove two screws from the top and side of the unit. Bend the side bracket securing tab over the edge of the unit and secure. Secure bracket to the top through the clearance screw hole.

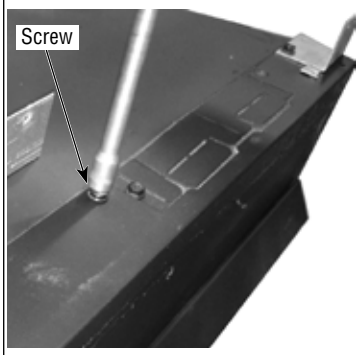

Step 2: Remove screw holding standoff to firebox, bend to 4” tall (as seen above) and attach screw.

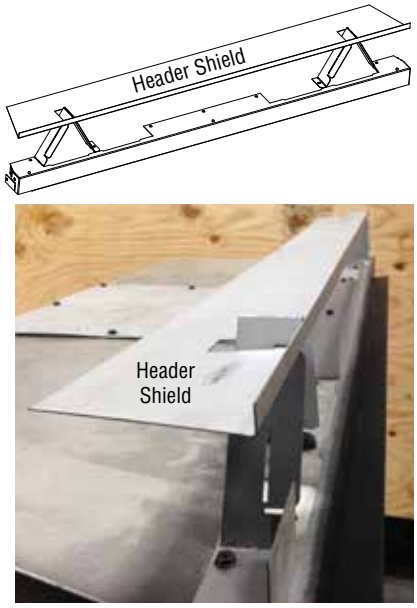

Step 3: Install the header shield by sliding it into the slot in the standoffs.

Step 4: Fireboard standoff can be secured to the capture screw holes.

5. Rough in the Electrical Supply, if Needed

As necessary, rough in the fireplace electrical supply per NEC and local codes.

6. Place the Fireplace in the Framing and Secure

NOTE: Nailing flanges, combustible members, and screw heads in areas directly adjacent to the nailing flanges are EXEMPT from the 1/2” clearance to combustible requirements for the firebox outer wrapper.

NOTE: Combustible framing may be in direct contact with the nailing flanges and may be located within 1/2” of screw heads and the firebox wrapper in areas adjacent to the nailing flanges.

Frame the opening to the exact dimensions specified in the framing details in this manual.

1. Bend out the appropriate nailing flanges for the drywall / finish material to be used *(**Figure 12**)*. Nailing flanges are provided for:
   - 1/2”, and
   - 5/8” framing depths.
2. Secure the fireplace to the side framing members using the unit’s nailing flanges — one top and bottom on each side of the fireplace front *(**Figure 12**)*. Use 8d nails or the equivalent.
3. A flush-mount mounting kit is available for purchase (order cat. number F3695). Attach the flush mounting bracket using two screws per bracket.

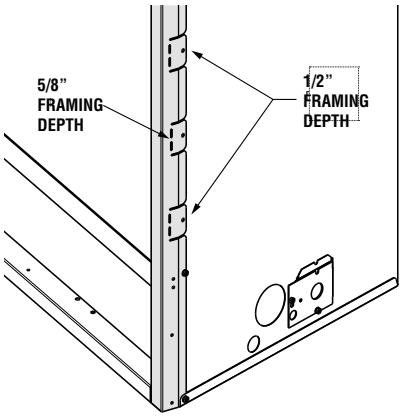

Figure 12 - Nailing Flanges

6A. Install the Non-Combustible Fireboard

1. Locate the non-combustible fireboard shipped with your fireplace.
2. Position the fireboard centered above the fireplace and secure to the framing members using drywall screws *(see **Figure 12A**)*.

6B. (Optional Accessory) Install The Rock/Stone Stop Kit, if Applicable

For use only with these fireplaces with thick facing materials and a decorative facade. Maximum allowed depth of non-combustible material is 6”.

INSTALLATION INSTRUCTIONS

1. Unbox items. Included items: 4 piece trim kit, 3 self-tapping screws and instructions.

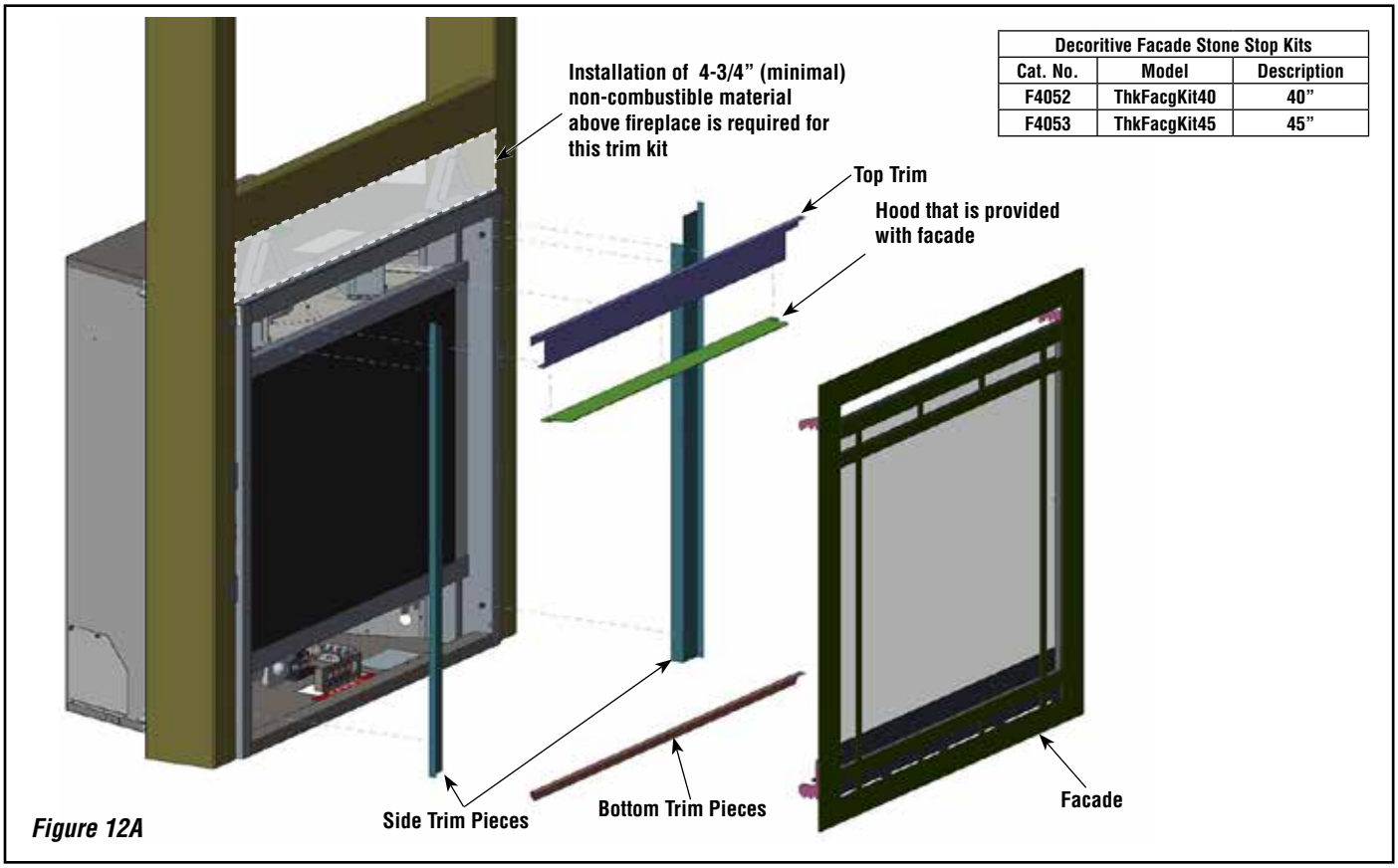

Decoritive Facade Stone Stop Kits		
Cat. No.	Model	Description
F4052	ThkFacgKit40	40”
F4053	ThkFacgKit45	45”

Figure 12A

VENT SYSTEM PREPARATION

7. Select a Horizontal or Vertical Vent System

1. With the fireplace secured in the framing, determine the vent route and identify the exterior termination location. The following sections describe vertical (roof) and horizontal (exterior wall) vent applications. Use only approved vent components. See ***Pages 30–31*** *(vertical) and* ***Pages 32–37*** *(horizontal).*

NOTE: This fireplace must be vented directly to the outside.

⚠ WARNING

The vent system may not service multiple appliances, and must never be connected to a flue serving a separate solid fuel burning appliance.

NOTE: The vent pipe is tested to be run inside an enclosed wall. There is no requirement for inspection openings in the enclosing wall at any of the joints in the vent pipe.

8. Install the Vent Restrictor (if necessary)

1. Use the vent run descriptions in ***Figure 14A*** to determine if a vent restrictor is necessary.
2. If necessary, assemble the vent restrictor and wing as detailed in ***Figures 14A*** and ***14D***
3. If necessary, install the appropriate vent restrictor *(**Figure 14B or 14C**).*

NOTE: The vent restrictor is shipped in the firebox.

Figure 14A - When to use a vent restrictor

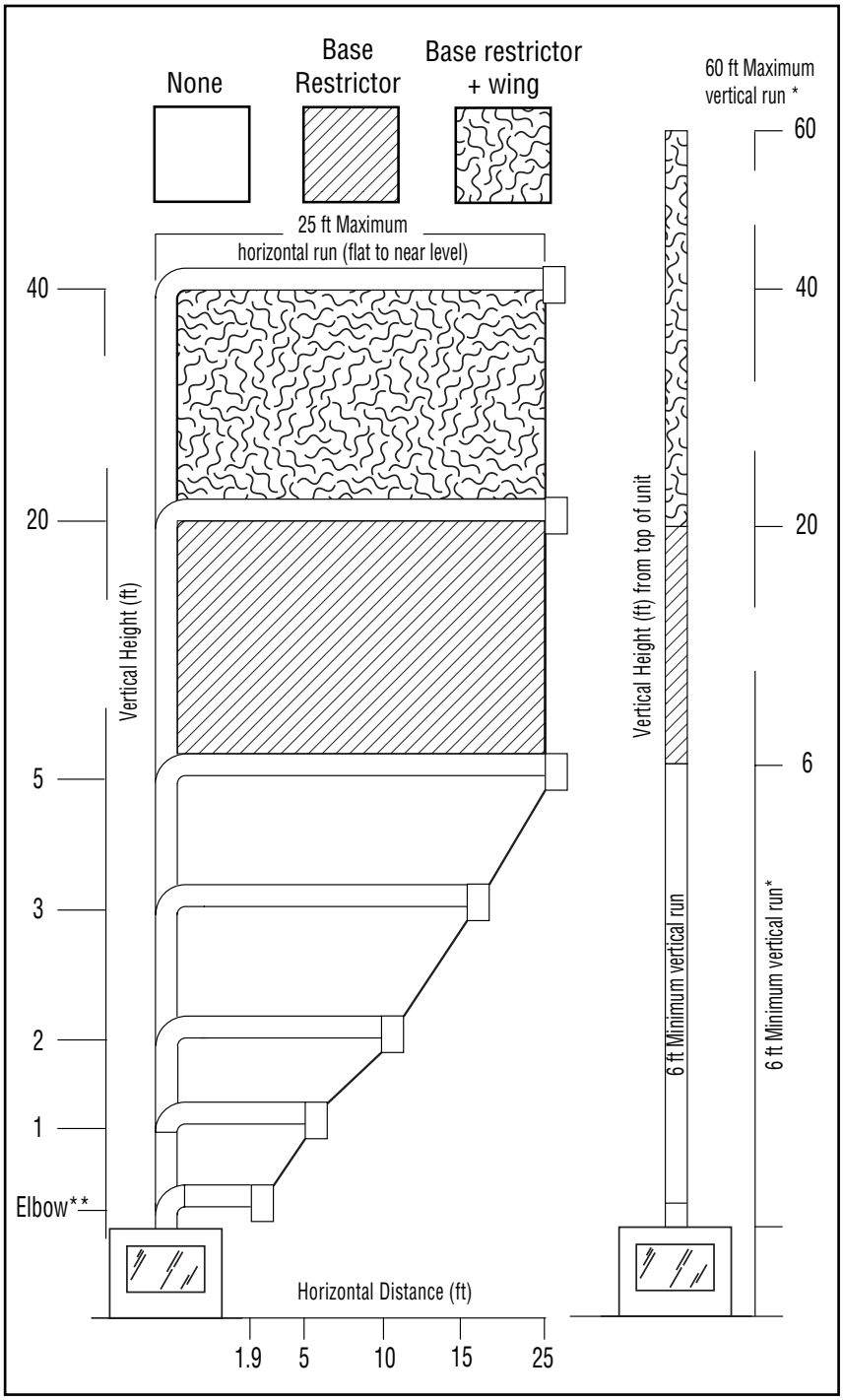

* **For straight runs or runs with elbows as illustrated in Vertical Vent Figures/Tables starting on *Page 30*.**

** **No rise required.**

Figure 14B - Vent restrictor installation, Top vent

Installation in top vent. Put flap (and wing if installed) directed toward the rear of unit.

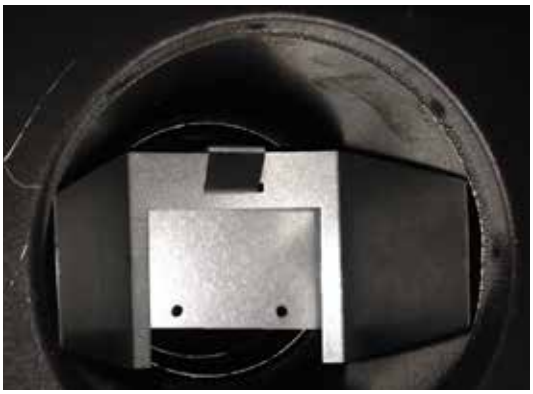

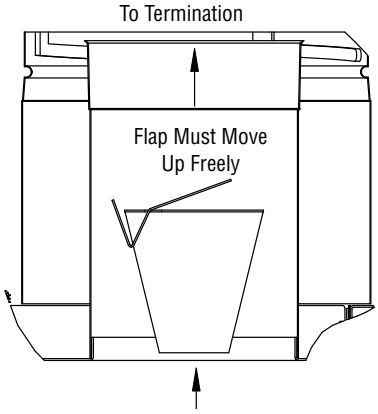

SEE PAGE 23 FOR VENT RESTRICTOR ASSEMBLY INSTRUCTIONS

Vent Restrictor with Vertical Terminations

When vertically terminating the vent system through the roof and using the vent restrictor, install the vent restrictor in the top vent of the fireplace outlet.

If installing more than 6 ft of vertical venting, install the restrictor *(**Figure 14B, Page 23**)*, from inside or outside the unit, in the inner fireplace collar. The vent restrictor is held in place by friction.

Vent Restrictor with Horizontal Terminations

When horizontally terminating a vent system with a vertical vent run up to 4 ft through an exterior wall, no vent restrictor is required.

If installing more than 6 ft of vertical venting, install the restrictor *(**Figure 14C, Page 23**)*, from inside or outside the unit, in the inner fireplace collar. The vent restrictor is held in place by friction.

Figure 14D - Vent restrictor assembly

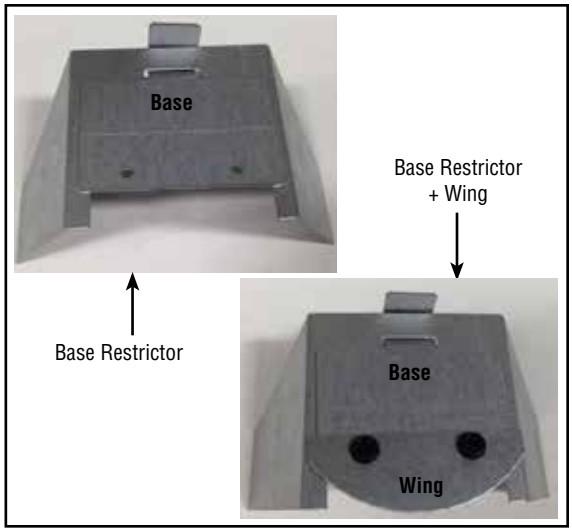

9. Connecting the Vent Pipe

Secure Vent® SV4.5 direct-vent system components are unitized concentric pipe components featuring positive twist lock connections *(**Figures 15A–15B**)*. All of the fireplaces covered in this document are fitted with collars having locking inclined channels. The dimpled end of the vent components fit over the fireplace/vent collar to create the positive twist lock connection.

1. Align the dimpled end over the collar, adjusting the radial alignment until the four (4) locking dimples are aligned with the inlet of the four (4) inclined channels on the collar *(**Figures 15A–15B**)*.
2. Push the vent component against the collar until it fully engages, then twist the component clockwise, running the dimples down and along the incline channels until they seat at the end of the channels.
   NOTE: The unitized design of the Secure Vent® components will engage and seal both the inner and outer vent pipe.
3. If desired, a #6 x 1/2” sheet metal screw can be used at the joint, but is not required as the pipe will securely lock when twisted *(**Figure 15A**)*.

Where required, a telescopic vent section (SV4.5LA) may be used to provide the installer with an option to install in tight and confined spaces, or where the vent run made up of fixed length pieces develops a joint in a undesirable location, or will not build up to the required length. The SV4.5LA Telescopic Vent Section has an effective length of from 1-1/2 to 7” (38 to 178 mm). The SV4.5LA is fitted with a locking inclined channel end (identical to a normal vent section component) and a plain end with three (3) pilot holes. Slip the plain end over the locking channel end of a standard SV4.5 vent component the required distance and secure with three (3) screws.

Figure 15A - Connecting vent components

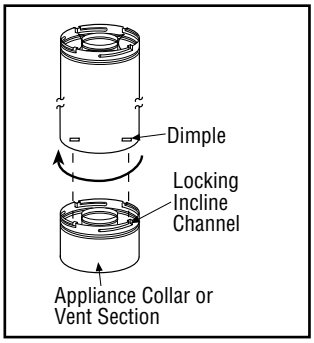

Figure 15B - Connected vent components

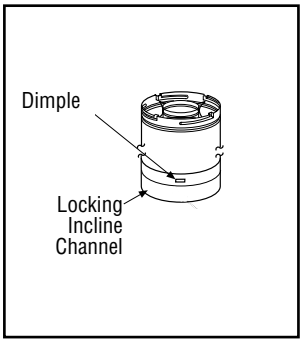

Figure 15C - Elbow Dimensions

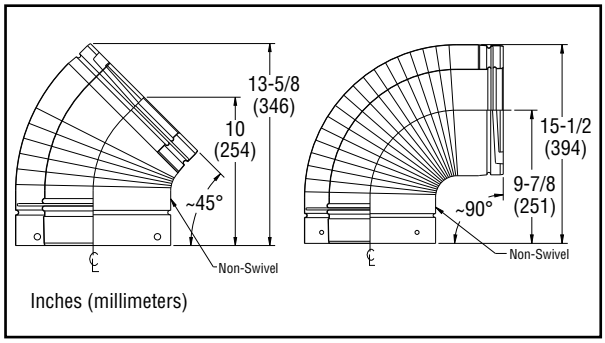

Vent elbows

Vent elbows are available in 90° and 45° configurations. Refer to ***Figure 15C*** for the SV4.5E45 and SV4.5E90 elbow dimensions. The elbows feature a twist section to allow them to be routed about the center axis of their initial collar section to align with the required direction of the next vent run element.

1. Rotate the elbow in a clockwise direction (to avoid the possibility of unlocking any of the previously connected vent sections) for proper alignment *(**Figure 15C**)*. See **Connecting the vent pipe** for more information.

Table 13 - Effective Vent Length

Model	Effective Length
SV4.5L6	4-1/2”
SV4.5L12	10-1/2”
SV4.5L24	22-1/2”

Model	Effective Length
SV4.5L36	34-1/2”
SV4.5L48	46-1/2”

Elbow Heat Shield(s)

NOTE: All models and vent configurations require one elbow shield mounted vertically to the top of the fireplace, as shown in ***Figure 16***, steps 1 through 3.

DRT4200 Models: Require a 1 foot minimum vertical rise before connecting an elbow.

DRT4000 Models: If using a 90 degree elbow directly off top of fireplace, a second Elbow Shield (included with fireplace) must be installed horizontally over the elbow, as shown in ***Figure 16***, steps 4 through 6.

Figure 16 - Elbow Heat Shield

ALL MODELS:

STEP 1. Locate the flat elbow shield. Break off and discard standoff.

STEP 2. Bend the three (3) tabs 90 degrees as shown.

STEP 3. Attach shield to fireplace using two (2) screws, as shown.

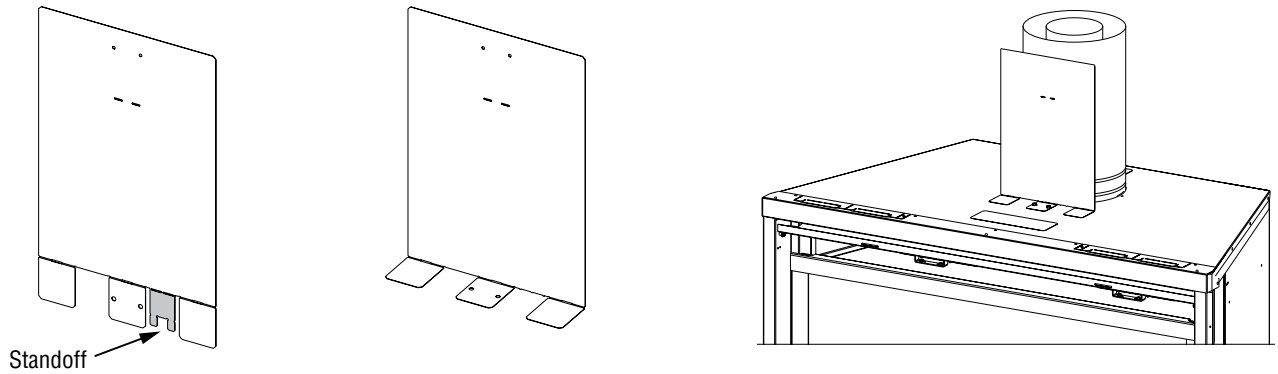

DRT4000 MODELS WITH 90 DEGREE ELBOW DIRECTLY OFF TOP OF FIREPLACE:

STEP 4. Locate second flat elbow shield. Break off standoff and insert tabs into shield as shown. Bend standoff tabs in opposing directions to secure to shield.

STEP 5. Bend the three (3) tabs 90 degrees as shown.

STEP 6. Attach second shield to previously installed shield two (2) screws, as shown.

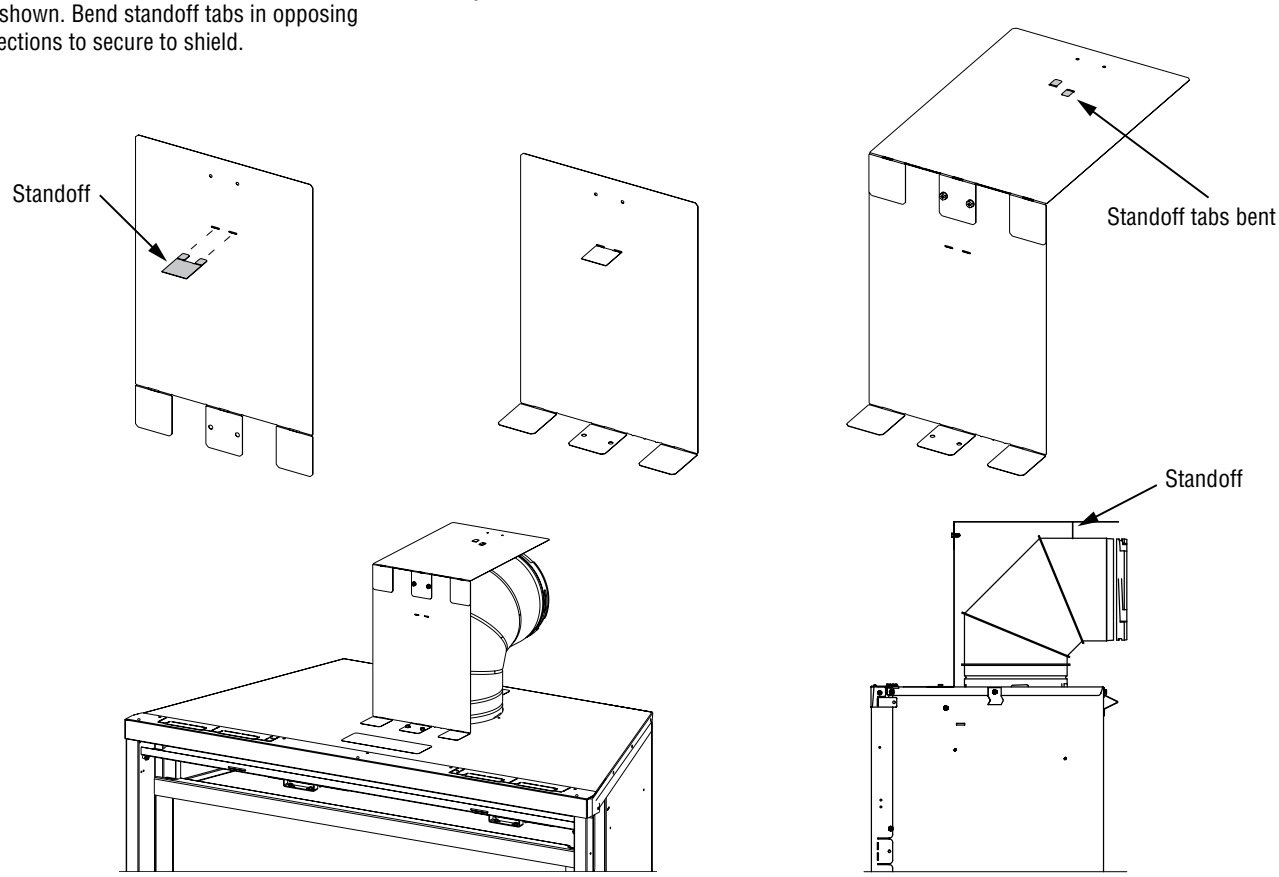

Completed elbow shields attached to top of fireplace

Vent section length table

Table 14 will assist calculating how many vent sections are needed for the planned vent configuration. When a vent section is engaged with another section, its effective length will be 1-1/2” shorter.

Table 14 - Vent Section Length

Nominal Section Length (in.)		6	12	24	36	48	Total Qty
Net Section Length (in.)		4.5	10.5	22.5	34.5	46.5	
Height of Vent		Number of Vent Sections					
in.	ft						
4.5	0.375	1	0	0	0	0	1
9	0.75	2	0	0	0	0	2
10.5	0.875	0	1	0	0	0	1
15	1.25	1	1	0	0	0	2
22.5	1.875	0	0	1	0	0	1
31.5	2.625	0	3	0	0	0	3
34.5	2.875	0	0	0	1	0	1
37.5	3.125	1	1	1	0	0	3
43.5	3.625	0	2	1	0	0	3
45	3.75	0	0	2	0	0	2
46.5	3.875	0	0	0	0	1	1
51	4.25	1	0	0	0	1	2
55.5	4.625	0	1	2	0	0	3
57	4.75	0	0	1	1	0	2
67.5	5.625	0	0	3	0	0	3
69	5.75	0	0	0	2	0	2
73.5	6.125	1	0	0	2	0	3
79.5	6.625	0	1	0	2	0	3
81	6.75	0	0	0	1	1	2
91.5	7.625	0	0	2	0	1	3
93	7.75	0	0	0	0	2	2
97.5	8.125	1	0	0	0	2	3
103.5	8.625	0	0	0	3	0	3
108	9	1	0	0	3	0	4
117	9.75	1	0	5	0	0	6
118.5	9.875	1	1	0	3	0	5
126	10.5	0	0	1	3	0	4
130.5	10.875	1	0	1	3	0	5
135	11.25	0	0	6	0	0	6
139.5	11.625	0	0	0	0	3	3
142.5	11.875	1	0	0	4	0	5
144	12	1	0	0	0	3	4
154.5	12.875	1	1	0	0	3	5
160.5	13.375	0	2	0	0	3	5
172.5	14.375	0	0	0	5	0	5
177	14.75	1	0	0	5	0	6
186	15.5	0	0	0	0	4	4
196.5	16.375	0	1	0	0	4	5
207	17.25	0	0	0	6	0	6
211.5	17.625	1	0	0	6	0	7
217.5	18.125	0	1	0	6	0	7
229.5	19.125	0	0	1	6	0	7
232.5	19.375	0	0	0	0	5	5
241.5	20.125	0	0	0	7	0	7
246	20.5	1	0	0	7	0	8

Nominal Section Length (in.)		6	12	24	36	48	Total Qty
Net Section Length (in.)		4.5	10.5	22.5	34.5	46.5	
Height of Vent		Number of Vent Sections					
in.	ft						
252	21	0	1	0	7	0	8
276	23	0	0	0	8	0	8
279	23.25	0	0	0	0	6	6
280.5	23.375	1	0	0	8	0	9
289.5	24.125	0	1	0	0	6	7
301.5	25.125	0	0	1	0	6	7
310.5	25.875	0	0	0	9	0	9
325.5	27.125	0	0	0	0	7	7
330	27.5	1	0	0	0	7	8
345	28.75	0	0	0	10	0	10
349.5	29.125	1	0	0	10	0	11
372	31	0	0	0	0	8	8
379.5	31.625	0	0	0	11	0	11
418.5	34.875	0	0	0	0	9	9
465	38.75	0	0	0	0	10	10
475.5	39.625	0	1	0	0	10	11
480	40	1	1	0	0	10	12
492	41	1	0	1	0	10	12
499.5	41.625	0	0	0	1	10	11
504	42	1	0	0	1	10	12
511.5	42.625	0	0	0	0	11	11
520.5	43.375	0	2	0	1	11	14
531	44.25	0	2	2	0	11	15
538.5	44.875	1	0	0	2	11	14
549	45.75	1	0	2	1	11	15
558	46.5	0	0	0	0	12	12
562.5	46.875	1	0	0	0	12	13
568.5	47.375	0	1	0	0	12	13
573	47.75	1	1	0	0	12	14
580.5	48.375	0	0	1	0	12	13
589.5	49.125	0	1	2	2	10	15
595.5	49.625	1	1	1	0	12	15
604.5	50.375	0	0	0	0	13	13
615	51.25	0	1	0	0	13	14
625.5	52.125	0	2	0	0	13	15
631.5	52.625	1	0	1	0	13	15
637.5	53.125	0	1	1	0	13	15
651	54.25	0	0	0	0	14	14
655.5	54.625	1	0	0	0	14	15
672	56	0	2	0	0	14	16
678	56.5	1	0	1	0	14	16
688.5	57.375	1	1	1	0	14	17
697.5	58.125	0	0	0	0	15	15
702	58.5	1	0	0	0	15	16
712.5	59.375	1	1	0	0	15	17
720	60	0	0	1	0	15	16

Clearance to combustibles

Maintain the minimum clearance to combustibles (e.g., framing, attic, ceiling insulation, etc.).
For all vertical runs:

- 1” (26 mm) from all sides

NOTE: Attic insulation shield (**H3907**, *see **Page 52**)* must be installed when blown or loose-fill insulation is used, and is required for all attic installations.

- 3” (77 mm) from the top
- 1” (26 mm) from the sides
- 1” (26 mm) from the bottom

10. Install the Vent System

Install the Vertical Termination Vent System

These instructions should be used as a guideline and do not supersede local codes in any way. Install venting according to local codes, these instructions, the current National Fuel Gas Code (ANSI-Z223.1) in the USA or the current standards of CAN/CGA-B149.1 in Canada.
Ensure clearances are in accordance with local installation codes and the requirements of the gas supplier.
Dégagement conforme aux codes d’installation locaux et aux exigences du foumisseunde gaz.
Vertical vent systems terminate through the roof. The minimum vent height above the roof and/or adjacent walls is specified in ANSI Z223.1 (In Canada, the current CAN/CGA-B149.1 installation code) by major building codes. Always consult your local codes for specific requirements. A general guide to follow is the gas vent rule *(**Table 6**)*.
The following figures and their associated vertical vent tables illustrate the various configurations that are possible for use with these fireplaces. Secure Vent® pipe is shown in these figures; Secure Flex® pipe may also be used.
A table summarizes each configuration’s minimum and maximum vertical and horizontal length parameters for a variety of applications.

1. Refer to ***Figure 22*** and ***Tables 17 and 18*** on ***Pages 30–31*** to select the type of vertical installation desired. Elbows are available in 90° and 45° configurations. Refer to ***Figure 15C*** on ***Page 24*** for the SV4.5E45 and SV4.5E90 elbow dimensional specifications.

Vertical (Straight) Installation

1. **Determine the number of straight vent sections required**—See **Effective Vent Length on *Pages 24 and 26*** for more information. Plan the vent lengths so that a joint does not occur at the intersection of ceiling or roof joists.
2. After venting has been connected to the fireplace, install the two (2) Vent Cover Plates *(see **Figure 17A**)*.

Figure 17 - Vertical (Straight) Installation

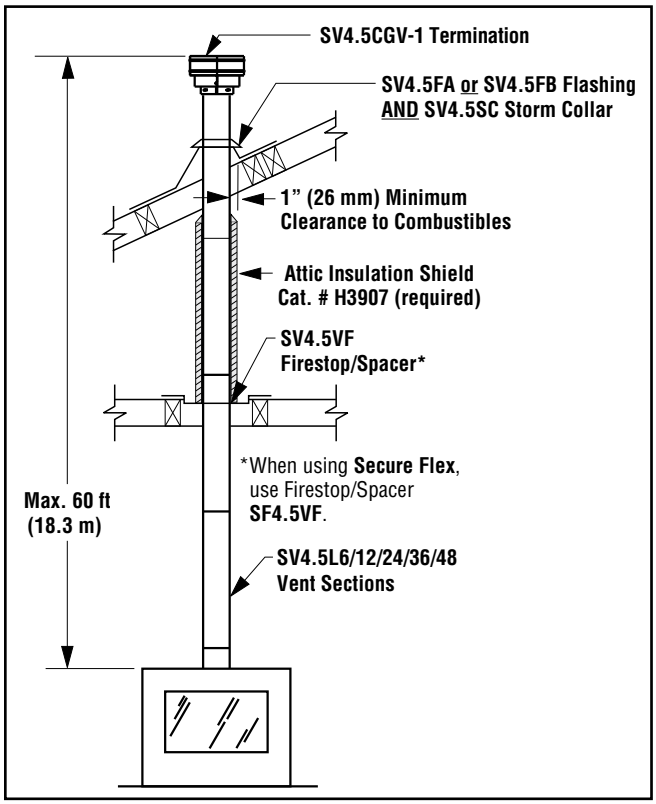

Figure 17A

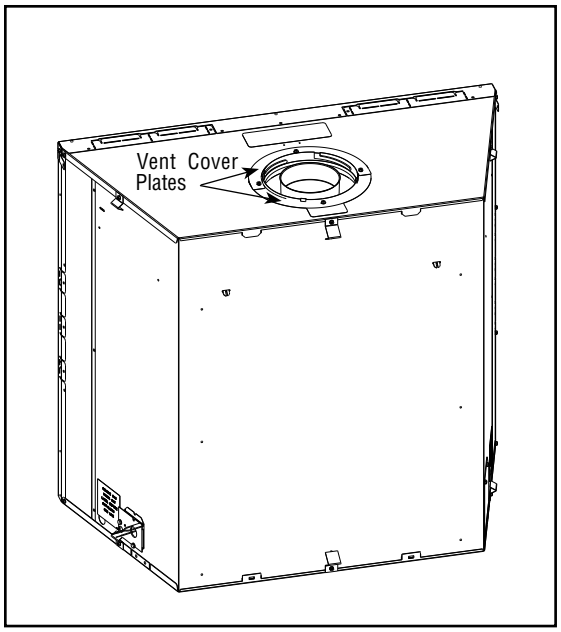

Vertical (Offset) Installation

1. **Analyze the vent route and determine the number of vent sections and elbows required**—See **Effective Vent Length on *Pages 24 and 26*** for more information. Plan the venting so that a joint does not occur in the ceiling or roof joists. Allow for elbows ***(Figure 15C, Page 24)***. Maintain clearances to combustibles equal to or *greater than minimum specified in these instructions (**Page 27**)*.
2. **Frame the ceiling opening**—Use a plumb line from the ceiling above the fireplace to locate the center of the vertical run. Cut and/or frame an opening, 10-1/2 x 10-1/2” (267 x 267 mm) inside dimensions, about this center mark ***(Figure 18)***.

Figure 18 - Framing the ceiling opening

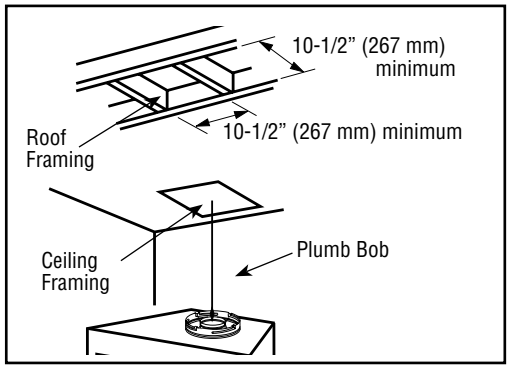

3. **Attach the vent components to the fireplace**—See **Connecting the vent pipe on *Page 24***.
4. **Attach the vent components to each other**—See **Connecting the vent pipe on *Page 24***.
5. **Install firestop/spacer at ceiling**—When using Secure Vent®, use SV4.5VF firestop/spacer at ceiling joists; when using Secure Flex®, use SF4.5VF firestop/spacer. If there is living space above the ceiling level, the firestop/spacer must be installed on the bottom side of the ceiling. If attic space is above the ceiling, the firestop/spacer must be installed on the top side of the joist. Route the vent sections through the framed opening and secure the firestop/spacer with 8d nails or other appropriate fasteners at each corner.

   Remember to maintain 1” (26 mm) clearance to combustibles, framing members, and attic or ceiling insulation when running vertical chimney sections. The gap between the vent pipe and a vertical firestop can be sealed with non-combustible caulking.

   NOTE: Attic Insulation Shield (H3907) must be installed when blown or loose-fill insulation is used, and is required for all attic installations.
6. **Support the vertical vent run sections**—Support the vertical portion of the venting system every 8 ft (2.4 m) above the fireplace vent outlet. One method of support is by utilizing field provided support straps (conventional plumber’s tape). Secure the plumber’s tape to the framing members with nails or screws. Loop the tape around the vent, securing the ends of the tape to the framing. If desired, sheet metal screws #6 x 1/2” length may be used to secure the support straps to the vent pipe ***(Figure 19)***.

   NOTE: Proper venting support is very important.

Figure 19 - Supporting the Vertical Vent Run

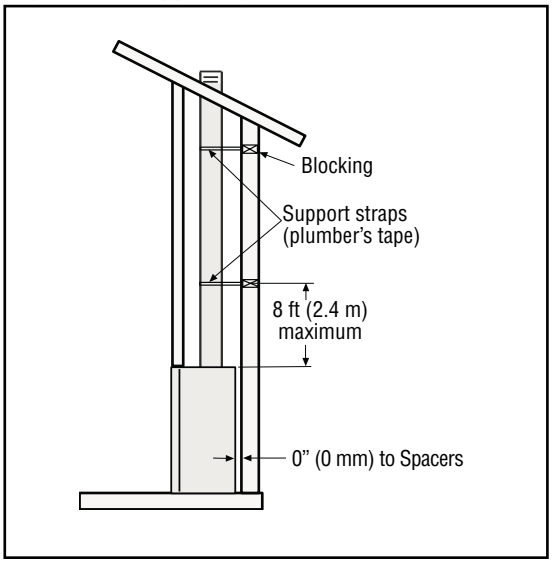

7. **Change vent direction of horizontal/inclined run**—Install the SV4.5E45 and SV4.5E90 elbows in the same manner as the straight vent sections. See **Vent elbows on *Page 24*** for more information.

8. **Continue installation of horizontal/inclined sections**—Continue with the installation of the straight vent sections in horizontal/inclined run. Install support straps every 5 ft (1.52 m) along horizontal/inclined vent runs using conventional plumber's tape in a direction away from the fireplace.

   Rise per foot run ratios are acceptable all the way to level. For best results, maintain the horizontal/inclined run in a straight (no dips), slightly elevated plane of approximately 1/4" per 1 ft (20 mm per 1 m).

   Maintain the required clearances to combustibles *(**Page 27**)*.

9. **Frame the roof opening**—Identify the location for the vent at the roof. Cut and/or frame opening *(**Table 15**)*.

Table 15 - Roof Framing Dimensions

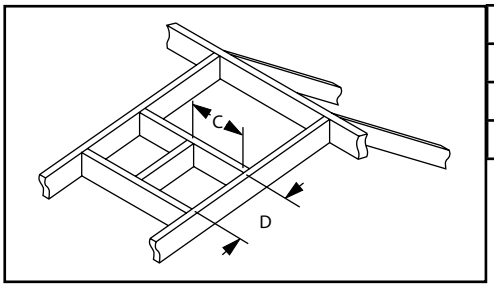

Pitch	C	D
0/12	10-1/2" (267 mm)	10-1/2" (267 mm)
6/12	10-1/2" (267 mm)	12" (305 mm)
12/12	10-1/2" (267 mm)	17-3/4" (451 mm)

10. **Install the roof flashing**—Extend the vent sections through the roof structure. Install the roof flashing over the vent section and position such that the vent column rises vertically (use carpenters level). Nail along perimeter to secure flashing or adjust roofing to overlap the flashing edges at top and sides only and trim where necessary. Seal the top and both sides of the flashing with waterproof caulking. The flashing must overlap the roofing material along the bottom.

11. **Install the storm collar**—Install the storm collar, supplied with the flashing, over the vent/flashing joint *(**Figure 20**)*. Loosen the storm collar screw. Slide collar down until it meets the top of the flashing. Tighten the adjusting screw. Apply non-combustible caulking or mastic around the circumference of the joint to provide a water tight seal.

Figure 20 - Installing the Storm Collar

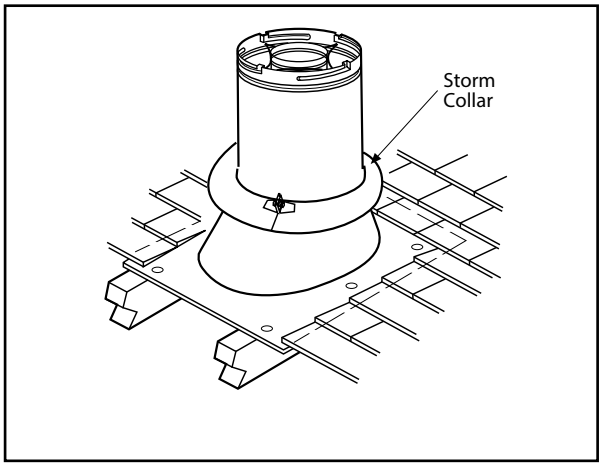

Figure 21 - Installing the Vertical Termination

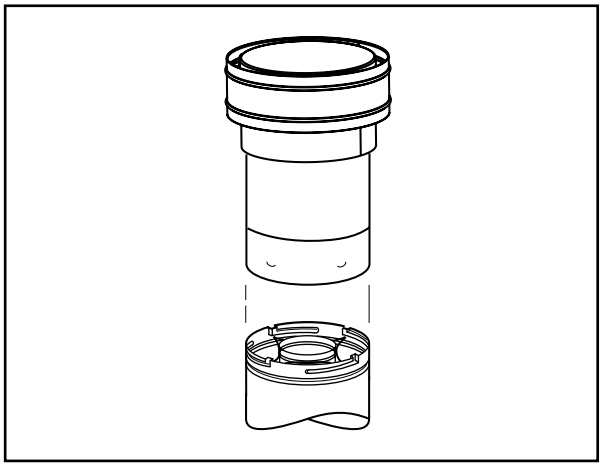

12. **Install the vertical termination**—The final step involves installation of the SV4.5CGV-1 vertical termination. Extend the vent sections to the correct height *(**Table 6*** and ***Figure 4, Page 13**)*. The SV4.5CGV-1 Vertical Termination *(**Figure 21**)* installs in the exact same fashion as any other Secure Vent® section. Align the termination over the end of the previously installed section, adjusting the radial alignment until the four (4) locking dimples of the termination are aligned with the inlets of the four (4) incline channels of the last vent section. Push the termination down until it fully engages, then twist the termination clockwise running the dimples down and along the incline channels until they seat at the end of the channels.

    If the vent system extends more than 5 ft (1.5 m) above the roof flashing, stabilizers may be necessary. Additional screws may be used at section joints for added stability. Guide wires or roof support assemblies may be attached to the joint for additional support on multiple joint configurations.

Vertical Vent Figures/Tables

NOTE: Secure Vent® rigid vent pipe is shown in the figures; Secure Flex® flexible vent pipe may also be used.

NOTE: Rise per foot run ratios are acceptable all the way to level. For best results, maintain the horizontal/inclined run in a straight (no dips), slightly elevated plane of approximately 1/4” per 1 ft (20 mm per 1 m).

NOTE: SV4.5VF (Secure Vent), SF4.5VF (Secure Flex) firestop/spacer must be used anytime vent pipe passes through a combustible floor or ceiling. SV4.5HF (Secure Vent), SF4.5HF (Secure Flex)firestop/spacer must be used anytime vent pipe passes through a combustible wall.

NOTE: Two (2) 45° elbows may be used in place of one (1) 90° elbow. The same rise to run ratios, as shown in the venting figures for 90° elbows, must be followed if 45° elbows are used.

⚠ WARNING

Do NOT join separate sections of concentric flexible vent pipe.

Figure 22 - Top Vent—Straight

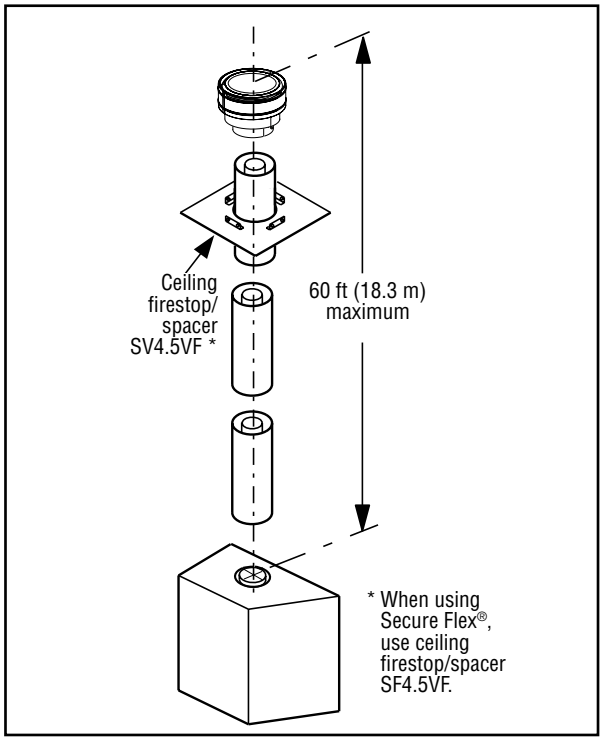

Install the U-shaped vent restrictor in any vent run with more than 6 ft of vertical rise. See *Page 23* for more information.

Minimum 6 ft and maximum of 60 ft of vertical venting.

IMPORTANT NOTE: DRT4000 series models may connect an elbow directly to the top flue collar. DRT4200 series models must use, at a minimum, a 1 foot vertical section before connecting an elbow.

Table 17 - Top Vent—Two 90° Elbows

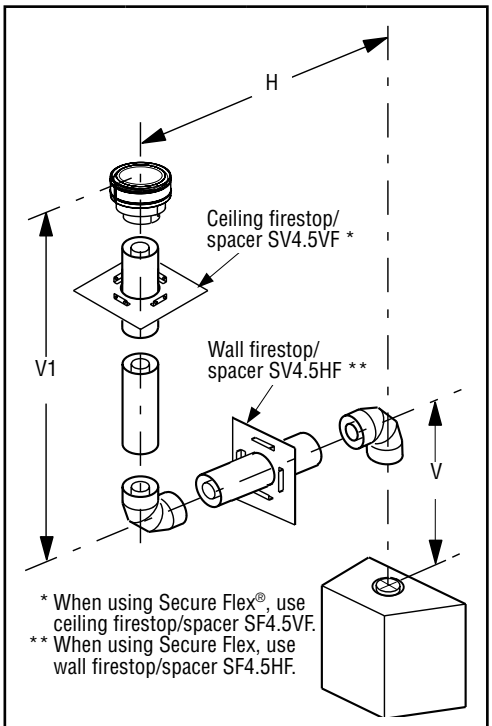

H Maximum		V Minimum	
feet	**meters**	**feet**	**meters**
5	1.524	Elbow Only	
5	1.524	1	0.305
10	3.048	2	0.610
15	4.572	3	0.914
25	7.62	5	1.524

$V + V_1 + H$ = 60 ft (18.3 m) maximum

H = 25 ft (7.62 m) maximum

Install the U-shaped vent restrictor in any vent run with more than 6 ft of vertical rise. See *Page 23* for more information.

If 25 ft of (H) horizontal vent run is needed, then 5 ft (straight section) minimum of (V) vertical vent will be required.

This table shows a 1 (V) to 5 (H) ratio. For every 1 ft of (V) vertical, you are allowed 5 ft of (H) horizontal run, up to a maximum horizontal run of 25 ft.

Minimum 6 ft and maximum of 60 ft of vertical venting.

Table 18 - Top Vent—Three Elbows

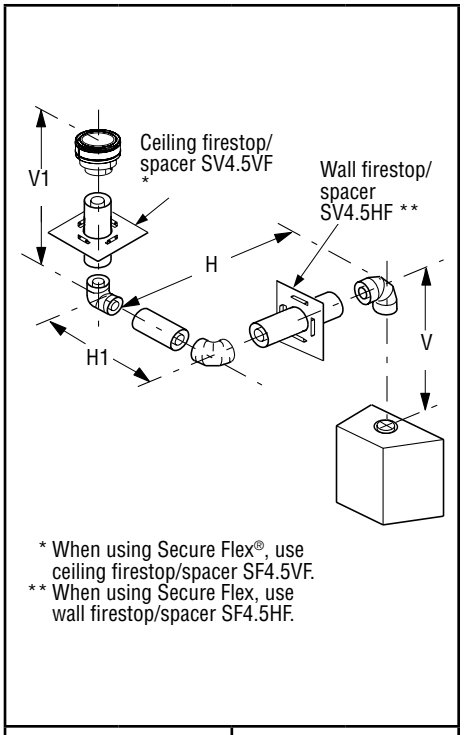

$H + H_1$ Maximum		V Minimum	
feet	**meters**	**feet**	**meters**
5	1.524	Elbow Only	
5	1.524	1	0.305
10	3.048	2	0.610
15	4.572	3	0.914
20	6.096	4	1.219

H + H1 = 20 ft (6.1 m) maximum

V + V1 + H + H1 = 60 ft (18.3 m) maximum

Install the U-shaped vent restrictor in any vent run with more than 6 ft of vertical rise. See *Page 23* for more information.

If 20 ft of (H) horizontal vent run is needed, then 4 ft (straight section) minimum of (V) vertical vent will be required.

This table shows a 1 (V) to 5 (H) ratio. For every 1 ft of (V) vertical, you are allowed 5 ft of (H) horizontal run, up to a maximum horizontal run of 20 ft.

NOTE: The vent system may have a maximum of three (3) 90° elbows.

Minimum 6 ft and maximum of 60 ft of vertical venting.

Install the Horizontal Termination Vent System

These instructions should be used as a guideline and do not supersede local codes in any way. Install venting according to local codes, these instructions, the current National Fuel Gas Code (ANSI-Z223.1) in the USA or the current standards of CAN/CGA-B149.1 in Canada.

Ensure clearances are in accordance with local installation codes and the requirements of the gas supplier.

Dégagement conforme aux codes d'installation locaux et aux exigences du foumisseunde gaz.

Horizontal vent systems terminate through an outside wall. Building Codes limit or prohibit terminating in specific areas *(**Table 7, Page 14**)*.

The following figures and their associated horizontal vent tables illustrate the various configurations that are possible for use with these fireplaces. Secure Vent® pipe is shown in these figures; Secure Flex® pipe may also be used. A table summarizes each configuration's minimum and maximum vertical and horizontal length parameters for a variety of applications. For more information on connecting the vent pipe, see ***Page 24***.

Assure that adequate space between the bottom of the horizontal run and the attic is provided so that blown in insulation does not contact the vent.

Figure 23 - Typical Horizontal Vent Installation

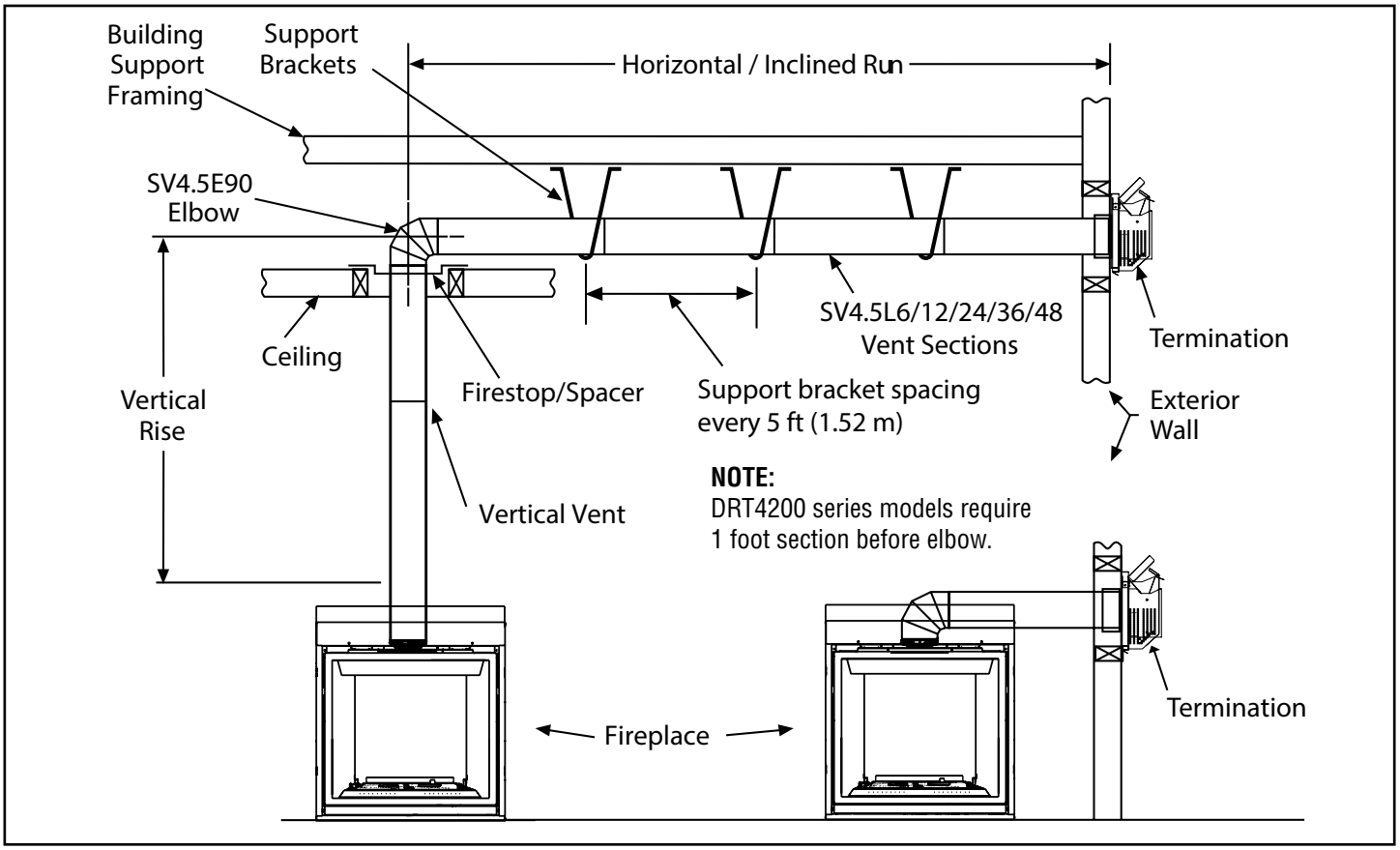

1. **Analyze the vent route and determine the number of vent sections and elbows required**—See **Effective Vent Length on *Pages 24 and 26*** for more information. Plan the venting so that a joint does not occur in the ceiling or roof joists. Allow for elbows *(**Figure 15C, Page 24**)*. Maintain clearances to combustibles equal to or greater than minimum specified in these instructions *(**Page 27**)*.
2. **Frame the exterior wall opening**—Locate the center of the vent outlet on the exterior wall *(**Table 10, Page 18**)*. Cut and/or frame an opening, 10-1/2 x 12-1/8" (267 x 308 mm) inside dimensions, about this center.
3. **Frame the ceiling opening**—If the vertical route is to penetrate a ceiling, use plumb line to locate the center above the fireplace. Cut and/or frame an opening, 10-1/2 x 10-1/2" (267 x 267 mm) inside dimensions, about this center *(**Figure 18, Page 28**)*.
4. **Attach the vent components to the fireplace**—See **Connecting the vent pipe on *Page 24***.
5. **Attach the vent components to each other**—See **Connecting the vent pipe on *Page 24***.
6. **Install the firestop/spacer at the ceiling**—When using Secure Vent®, use SV4.5VF firestop/spacer at ceiling joists; when using Secure Flex®, use SF4.5VF firestop/spacer. If there is living space above the ceiling level, the firestop/ spacer must be installed on the bottom side of the ceiling. If attic space is above the ceiling, the firestop/spacer must be installed on the top side of the joist. Route the vent sections through the framed opening and secure the firestop/spacer with 8d nails or other appropriate fasteners at each corner.

   Maintain 1" (26 mm) clearance to combustibles, framing members, and attic or ceiling insulation when running vertical chimney sections.
7. **Support the vertical run sections**—On the vertical run, support the venting system every 8 ft (2.4 m) above the fireplace vent outlet with field provided support straps (Plumber's tape). Attach the straps to the vent pipe and secure to the framing members with nails or screws *(**Figure 19, Page 28**)*.

8. **Change vent direction**—At transition from or to a horizontal/inclined run, install SV4.5E45 or SV4.5E90 elbows in the same manner as the straight vent sections. The elbows feature a twist section to allow them to be routed about the center axis of their initial collar section to align with the required direction of the next vent run element. Twist elbow sections in a clockwise direction only so as to avoid the possibility of unlocking any of the previously connected vent sections *(**Figure 15C, Page 24**)*.
9. **Continue installation of horizontal/inclined sections**—Continue with the installation of the straight vent sections in horizontal/inclined run. Install support straps every 5 ft. (1.52 m) along horizontal/inclined vent runs using conventional plumber's tape in a direction away from the fireplace *(**Figure 23, Page 32**)*. Maintain the horizontal/inclined run in a straight (no dips), slightly elevated plane. The recommended incline is approximately 1/4" per 1 ft (20 mm per 1 m) horizontal, in a direction away from the fireplace. **Smaller rise per foot run ratios are acceptable all the way to at or near level.** Use a carpenter's level to measure from a constant surface and adjust the support straps as necessary. Maintain the required clearances to combustibles *(**Page 27**)*.
10. **Assemble the vent run to the exterior wall**—If not previously measured, locate the center of the vent at the exterior wall. Prepare the opening. Assemble the vent system until the terminus of the last section is within 7" (178 mm) to 11-1/4" (286 mm) inboard of the exterior surface to which the SV4.5HT termination is to be attached *(**Figure 25, Page 34**)*. If the terminus of the last section is not within this distance, use the telescopic vent section SV4.5LA, as the last vent section. ***Table 20, Page 35*** lists the additional venting components needed (in addition to the termination and adaptor) for a range of wall thicknesses.
11. **Attach the termination adaptor**—Attach the adaptor (SV4.5RCH, provided with the termination) to the vent section or telescoping vent section, elbow or fireplace collar *(**Figure 25, Page 34**)*.
12. **Install the firestop/spacer at the exterior wall**—When using the square termination, install SV4.5HF (Secure Vent®), SF4.5HF (Secure Flex®) Firestop/Spacer over the opening at the exterior side of the framing, long side up, with the 3" spacer clearance at the top *(**Figure 25, Page 34**)* and nail into place.
    NOTE: The firestop/spacer may also be installed over the opening at the interior side of the framing.
13. **Install the termination**—From outside the exterior wall, slide the collars of the termination onto the adaptor (the outer over the outer and the inner inside the inner) until the termination seats against the exterior wall surface to which it will be attached. Orient the housing of the termination with the arrow pointed upwards. Secure the termination to the exterior wall. The horizontal termination must not be recessed into the exterior wall or siding by more than the 1-1/4" (32 mm) *(**Figure 26, Page 34**)*.
    NOTE: If the venting exits the building below grade, or close to grade, see **Installation Accessories on *Page 52* for available snorkel terminations. The termination must be above grade and above the expected level of snow accumulation.**
    NOTE: The vent termination is hot while in operation and for a period of time following the use of the fireplace. To prevent contact with hot surfaces, use a horizontal termination guard; available for purchase at your local dealer.

The horizontal terminations have been designed to perform in a wide range of weather conditions. Our terminations meet or exceed industry standards.

When selecting the locations of your horizontal terminations, **do not place the termination where water from eaves and adjoining rooflines may create a heavy flow of cascading water onto the termination cap**. If the cap must be placed where the possibility of cascading water exists, it is the responsibility of the builder to direct the water away from the termination cap by using gutters or other means.

Take care to carefully follow the installation instructions for the termination, including the use of silicone caulking where required.

Figure 25 - Installing the Horizontal Termination

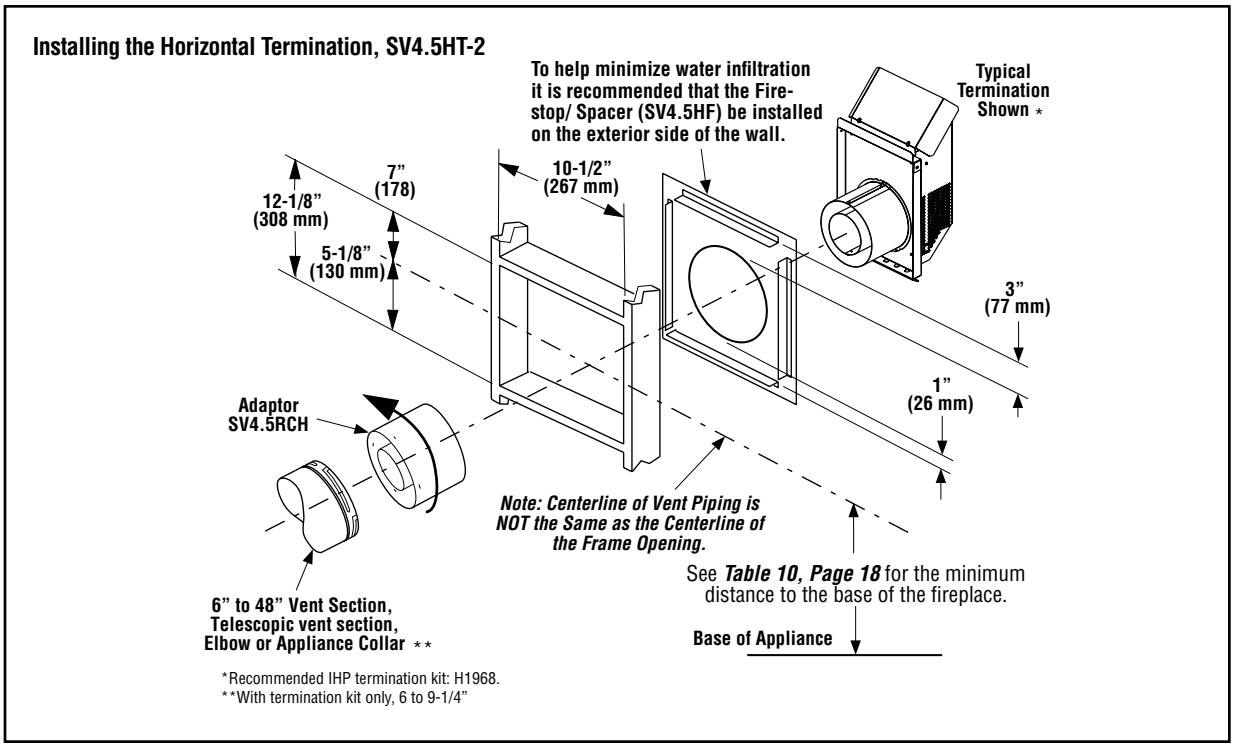

NOTE: To help minimize water infiltration install the firestop/spacer (SV4.5HF) on the exterior side of the wall. The firestop may be caulked with mill base caulk (such as 10K81) or high-temperature silicone.

Figure 26 - Venting Connection and Exterior Wall Recessing of the Horizontal Termination H1968

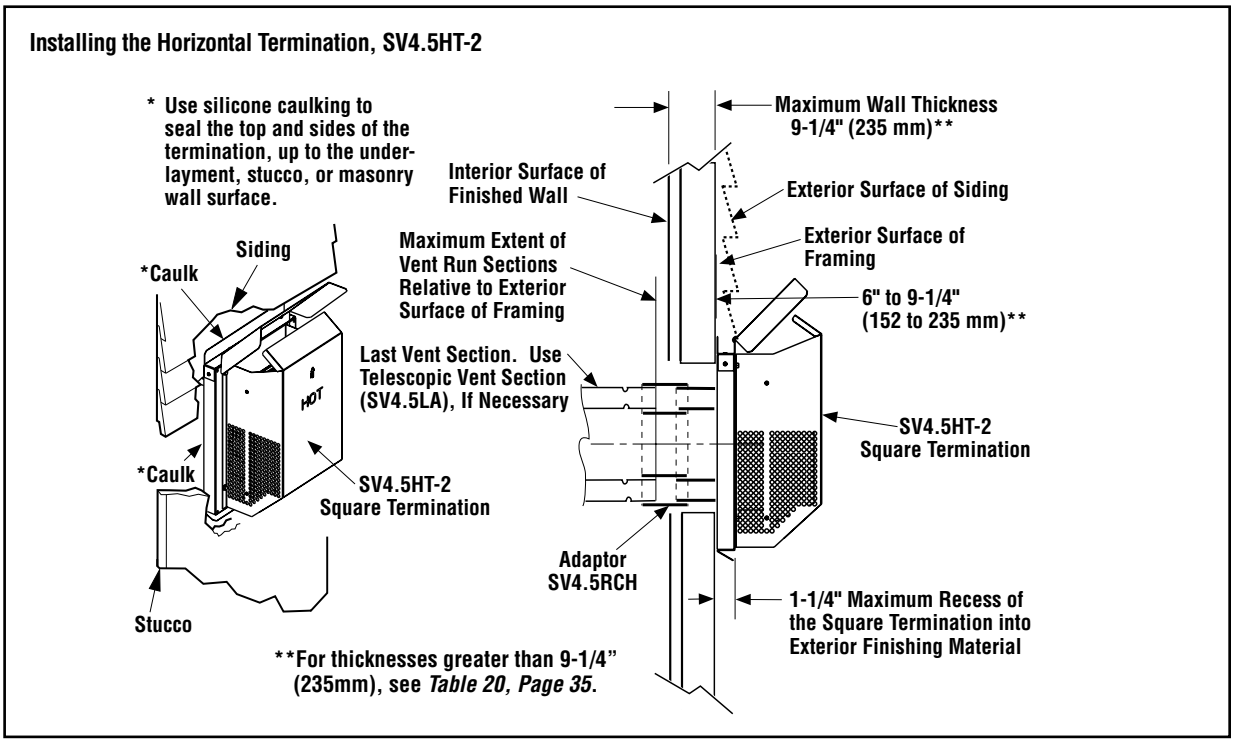

Table 20 - Venting Components Required for Various Exterior Wall Thicknesses, when using Typical Termination Kits

Vent Components Required	Exterior Wall Thickness
Termination Kit Only	6 to 9-1/4” (152 to 235 mm)
Termination Kit and 6” Vent Section (SV4.5L6)	10-3/4 to 14” (273 to 356 mm)
Termination Kit and 12” Vent Section (SV4.5L12)	16-3/4 to 20” (426 to 508 mm)
Termination Kit and Telescopic Section (SV4.5LA) and 6” vent section (SV4.5L6)	11-3/4 to 20” (299 to 508 mm)

Horizontal Vent Figures/Tables

NOTE: Secure Vent® rigid vent pipe and terminal are shown in the figures. Secure Flex® flexible vent pipe and terminal may also be used.

NOTE: Two (2) 45° elbows may be used in place of one (1) 90° elbow. The same rise to run ratios, as shown in the venting figures for 90° elbows, must be followed if 45° elbows are used.

NOTE: Maintain the horizontal/inclined run in a straight (no dips), slightly elevated plane. The recommended incline is approximately 1/4” per 1 ft (20 mm per 1 m) horizontal, in a direction away from the fireplace. Smaller rise per foot run ratios are acceptable all the way to at or near level. Use a carpenter’s level to measure from a constant surface and adjust the support straps as necessary.

NOTE: SV4.5VF (Secure Vent), SF4.5VF (Secure Flex) firestop/spacer must be used any time vent pipe passes through a combustible floor or ceiling. SV4.5HF (Secure Vent), SF4.5HF (Secure Flex) firestop/spacer must be used any time vent pipe passes through a combustible wall.

⚠ WARNING

Do not join separate sections of concentric flexible vent together.

Table 22 - Top Vent—One 90° Elbow, Elbow Connection at Fireplace

H Maximum		V Minimum	
feet	meters	feet	meters
3	0.91	**Elbow only	

Install the U-shaped vent restrictor in any vent run with more than 4 ft of vertical rise. See *Page 23* for more information.

See ***Table 20, Page 35*** as an aid in venting component selection for a particular range of exterior wall thicknesses.

***NOTE**: Only in top vent where elbow is connected at fireplace collar is it allowed to count elbow as 1 ft. vertical (V) rise.*

*****NOTE**:*
DRT4200 series models require, at least, one foot of rise directly off unit before connection of elbow.

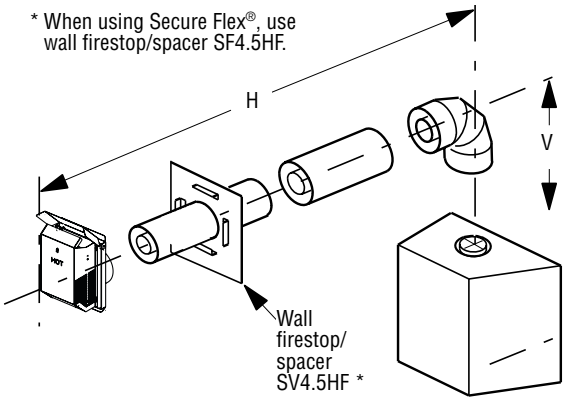

Table 23 - Top Vent—One 90° Elbow, Elbow Connection NOT at Fireplace

H Maximum		V Minimum	
feet	meters	feet	meters
5	1.524	1	0.305
10	3.048	2	0.610
15	4.572	3	0.914
25	7.62	5	1.524

Install the U-shaped vent restrictor in any vent run with more than 4 ft of vertical rise. See *Page 23* for more information.

See ***Table 20, Page 35*** as an aid in venting component selection for a particular range of exterior wall thicknesses.

If 25 ft of (H) horizontal vent run is needed, then 5 ft minimum of (V) vertical vent will be required.

This table shows a 1 (V) to 5 (H) ratio. For every 1 ft of (V) vertical, you are allowed 5 ft of (H) horizontal run, up to a maximum horizontal run of 25 ft (7.62 m).

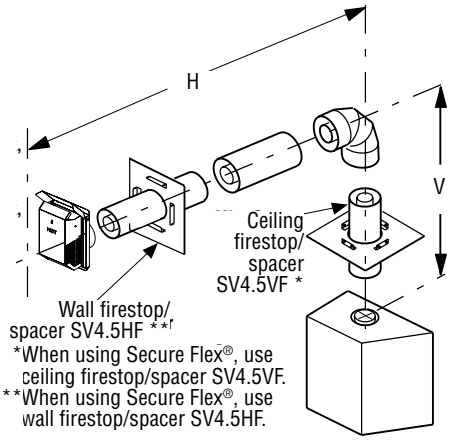

Table 25 - Top Vent—Two 90° Elbows

$H + H_1$ Maximum		V Minimum	
feet	meters	feet	meters
3	0.91	Elbow only	
5	1.524	1	0.305
10	3.048	2	0.610
15	4.572	3	0.914
25	7.62	5	1.524

$V + H + H_1$ = 60 ft (18.288 m) maximum

$H + H_1$ = 25 ft (7.62 m) maximum

Install the U-shaped vent restrictor in any vent run with more than 4 ft of vertical rise. See *Page 23* for more information.

See ***Table 20, Page 35*** as an aid in venting component selection for a particular range of exterior wall thicknesses.

If 25 ft of (H) horizontal vent run is needed, then 5 ft minimum of (V) vertical vent will be required.

This table shows a 1 (V) to 5 (H) ratio. For every 1 ft of (V) vertical, you are allowed 5 ft of (H) horizontal run, up to a maximum horizontal run of 25 ft (7.62 m).

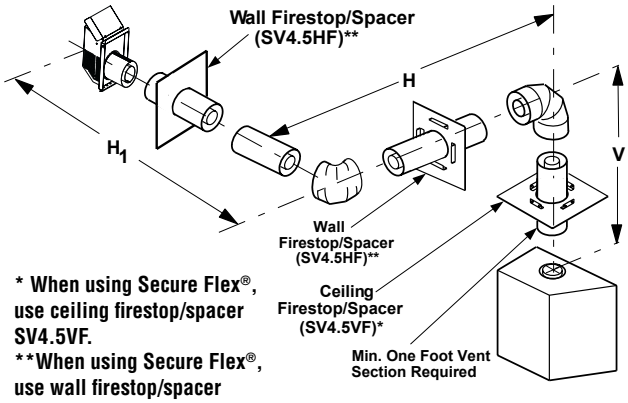

*** When using Secure Flex®, use ceiling firestop/spacer SV4.5VF.**
****When using Secure Flex®, use wall firestop/spacer SV4.5HF.**

Table 27 - Top Vent—Three 90° Elbows

H Maximum		V Minimum	
feet	**meters**	**feet**	**meters**
5	1.524	***Elbow only	
5	1.524	1	0.305
10	3.048	2	0.610
15	4.572	3	0.914
20	6.096	4	1.219

$H + H_1$ = 25 ft (7.62 m) maximum

$V + V_1 + H + H_1$ = 60 ft (18.288 m) maximum

Install the U-shaped vent restrictor in any vent run with more than 4 ft of vertical rise. See *Page 23* for more information.

See ***Table 20, Page 35*** as an aid in venting component selection for a particular range of exterior wall thicknesses.

If 20 ft of (H) horizontal vent run is needed, then 4 ft minimum of (V) vertical vent will be required.

This table shows a 1 (V) to 5 (H) ratio. For every 1 ft of (V) vertical, you are allowed 5 ft of (H) horizontal run, up to a maximum horizontal run of 20 ft (6.096 m).

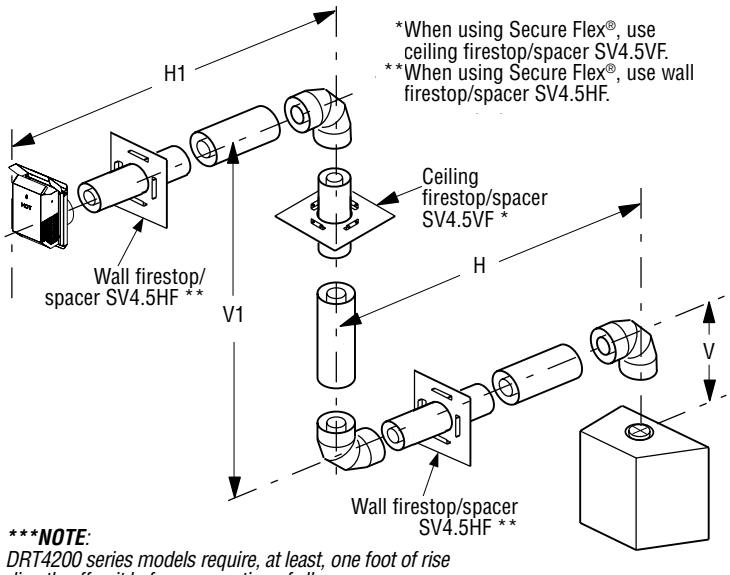

******NOTE:***
DRT4200 series models require, at least, one foot of rise directly off unit before connection of elbow.

Vertical or Horizontal Venting Using Secure Flex® Kits and Components

Secure Flex® venting kits and components may be used in any other vent installation where rigid Secure Vent® (SV4.5) direct-vent components can be used. All restrictions, clearances and allowances pertaining to rigid vent also apply to flexible vent. Do NOT modify Secure Flex kits . Also, do NOT join separate sections of flex vent together. Secure Flex kits can be installed on the end of a Secure Vent (SV4.5) rigid vent run, provided that doing so does not violate any of the venting length, height, routing, horizontal to vertical ratio requirements, or clearance considerations detailed in this manual. When combined, a rigid vent should not be installed between two flexible vents.

Secure Flex kits come with an included adaptor that can be installed on the fireplace collar or the inclined channel end of the last Secure Vent (SV4.5) vent section in a rigid system in the exact same fashion as any other Secure Vent section. Align the dimpled end of the adaptor over the previously installed section or fireplace collar, adjusting the radial alignment until the four locking dimples of the adaptor are aligned with the inlets of the four incline channels of the last vent section or collar. Push on the adaptor until it is fully engaged, then twist the adaptor clockwise running the dimples down and along the incline channels until they seat at the end of the channels.

Figure 27 - Flexible Vent Adaptor

Figure 28 - Flexible Vent

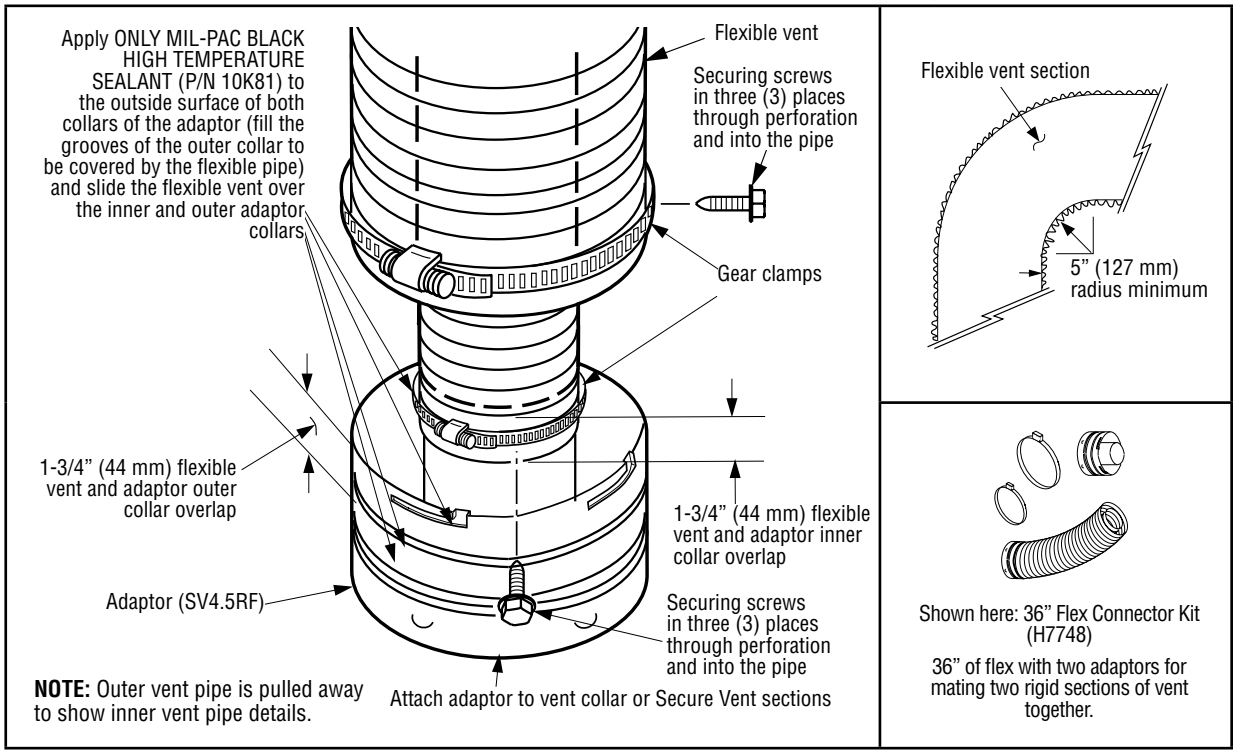

1. Install the Inner Flex Pipe.
   - **a.** Install the small gear clamp loosely around the inner flexible vent, then push it back out of the way.
   - **b.** Apply a bead of Mill-Pac Black (700 °F) high temperature sealant (P/N 10K81) to the inner adaptor collar, approximately 1/2" from the end.
   - **c.** Pull and extend the inner flexible vent.
   - **d.** Slide the inner flex vent over the adaptor collar at least 1-3/4".

   NOTE: Ensure the flex vent is free from damage or tears.

   - **e.** Slide the gear clamp down and tighten it fully to secure the flexible vent to the adaptor inner collar approximately 3/4" from the end of the flex.
   - **f.** Install three (3) sheet metal screws 120° apart through the flexible vent and into the adaptor collar just below the gear clamp to provide additional security to the connection.

2. Install the outer Flex Pipe.
   a. Install the large gear clamp loosely around the outer flexible vent pipe, then push it back out of the way.
   b. Apply a bead of Mill-Pac Black (700 °F) high temperature sealant (P/N 10K81) to the outer adaptor collar. Cover to the grooves of the collar that extend approximately 1” from the end and to the flat surface, approximately 1 3/8” from the end.
   c. Pull and extend the outer flexible vent.
   d. Slide the outer flexible vent over the adaptor collar. Ensure the flexible vent completely engages the adaptor collar 1-3/4” from the end, and that it is free from damage or tears.
   e. Slide the gear clamp down and tighten it fully to secure the flexible vent to the adaptor outer collar approximately 3/4” from the end of the flexible vent.
   f. Install three (3) sheet metal screws 120° apart through the flexible vent and into the adaptor collar just below the gear clamp to provide additional security to the connection.
3. Route the flexible vent.

   NOTE: Ensure that the flexible vent is properly routed to provide the required clearance. Do NOT allow the flexible vent to bend in a radius tighter than 5” (127 mm) *(**Figure 28**)*. Place the internal flexible vent spacers evenly and avoid kinking the inner vent. Support horizontal sections of flexible vent with metal straps at 2 ft (0.61 m) intervals.
4. Install firestop/spacers at ceiling and wall penetrations.
   - SF4.5VF firestop/spacer for ceilings
   - SF4.5HF firestop/spacer for walls

   NOTE: See the appropriate sections and figures shown throughout the venting section for installation requirements.
5. Attach the flexible vent to the termination.

   NOTE: Secure Flex® components can be purchased separately and attached to bulk lengths of Secure Flex flexible vent cut to size at the job site. Attach the flexible vent to the Secure Flex terminations as it was attached to the adaptor *(**Figure 27**)*.

   NOTE: Attach Secure Flex vent to Secure Flex terminations only. Do NOT substitute Secure Vent® terminations or Secure Vent adaptor for Secure Flex components. Secure Flex termination and adaptor collars are a different circumference than Secure Vent collars. Secure Flex vent has an longer center tube to improve ease-of-installation.

11. Complete the Field Wiring

⚠ CAUTION

The ground supply lead must be connected to the wire attached to the green ground screw located on the outlet box (see wiring diagrams). Failure to do so will result in a potential safety hazard. The appliance must be electrically grounded in accordance with local codes or, in the absence of local codes, the National Electrical Code, ANSI/NFPA 70—latest edition (in Canada, the current CSA C22.1 Canadian Electrical Code).

⚠ CAUTION

Label all wires prior to disconnection when servicing controls. Wiring errors can cause improper and dangerous operation.

⚠ ATTENTION

Au moment de l'entretien des commandes, étiquetez tous les fils avant de les débrancher. Des erreurs de câblage peuvent entraîner un fonctionnement inadéquat et dangereux.

⚠ WARNING

Electronic models of these appliances are equipped with a three-prong (grounding) plug utilized in connecting the electronic components to the junction box in the lower compartment. This grounding plug provides protection against shock hazard and should be plugged directly into a properly grounded three-prong receptacle. DO NOT cut or remove the grounding prong from the plug.

Verify proper operation after servicing.
S'assurer que l'appareil fonctionne adéquatement une fois l'entretien terminé.
The gas valve is set in place and pre-wired at the factory.

***NOTE**: For DRT4200 series models, This outlet as shown must be wired directly to the AC breaker box so the bottom receptacle is not switched. This also is the configuration needed for the optional FBK-250 blower.*

For DRT4000 series models, if an optional FBK-100 or FBK-200 blower is to be installed, an additional AC wire, 2-conductor with ground, must be ran to a wall switch box at the time of the fireplace installation. The receptacles in the outbox are then split so the bottom receptacle is hot at all times and the top switched receptacle is for the blower.

Figure 29 - Wiring Diagram—Junction Box

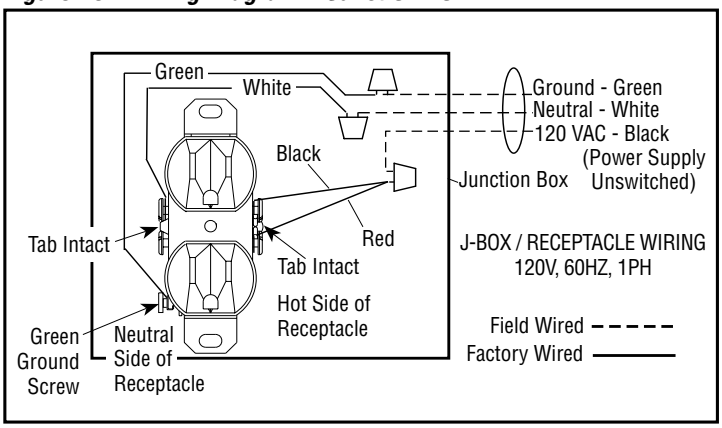

Electronic Wiring DRT4000-E series

One of the following optional controls must be used:

- ON/OFF Wall Switch,
- Thermostat, or
- Remote Control

See the **Operation** section on ***Page 55*** for more details.

NOTE: Electronic models must be connected to the main power supply.

1. Route a 3-wire, 120 Vac, 60 Hz, 1 ph power supply to the fireplace junction box.
2. Remove the electrical inlet cover plate from the side of the unit by removing the plate's securing screws ***(Table 12, Page 18)***.
3. If unit is not supplied with a strain relief, remove the cover plate knockout. Then, feed the power supply wire through the knockout opening and into the unit junction box.
4. Connect the black power supply wire to the lower outlet's red pigtail lead ***(Figures 29, 30A and 30B)***. Connect the white power supply wire to the outlet's common terminal.
5. Connect the ground supply wire to the pigtail lead attached to the outlet's green ground screw. Restrain the inlet power lead per NEC or local codes.
6. If a wall-mounted ON/OFF control, High/Low switch, or thermostat is to be used, mount it in a convenient location on a wall near the fireplace.
7. If an optional control is to be used, wire it in the low voltage circuit ***(Figures 30A & 30B, Pages 41 & 42)***.
   NOTE: The supplied 15 ft of 2-conductor wire has one end of each conductor connected to the gas valve circuit and the other end of each conductor placed loose inside the bottom compartment.
8. After the wiring is complete, replace the cover plate.

Figure 30A - Wiring Diagram—Electronic Gas Valve DRT4000-E series

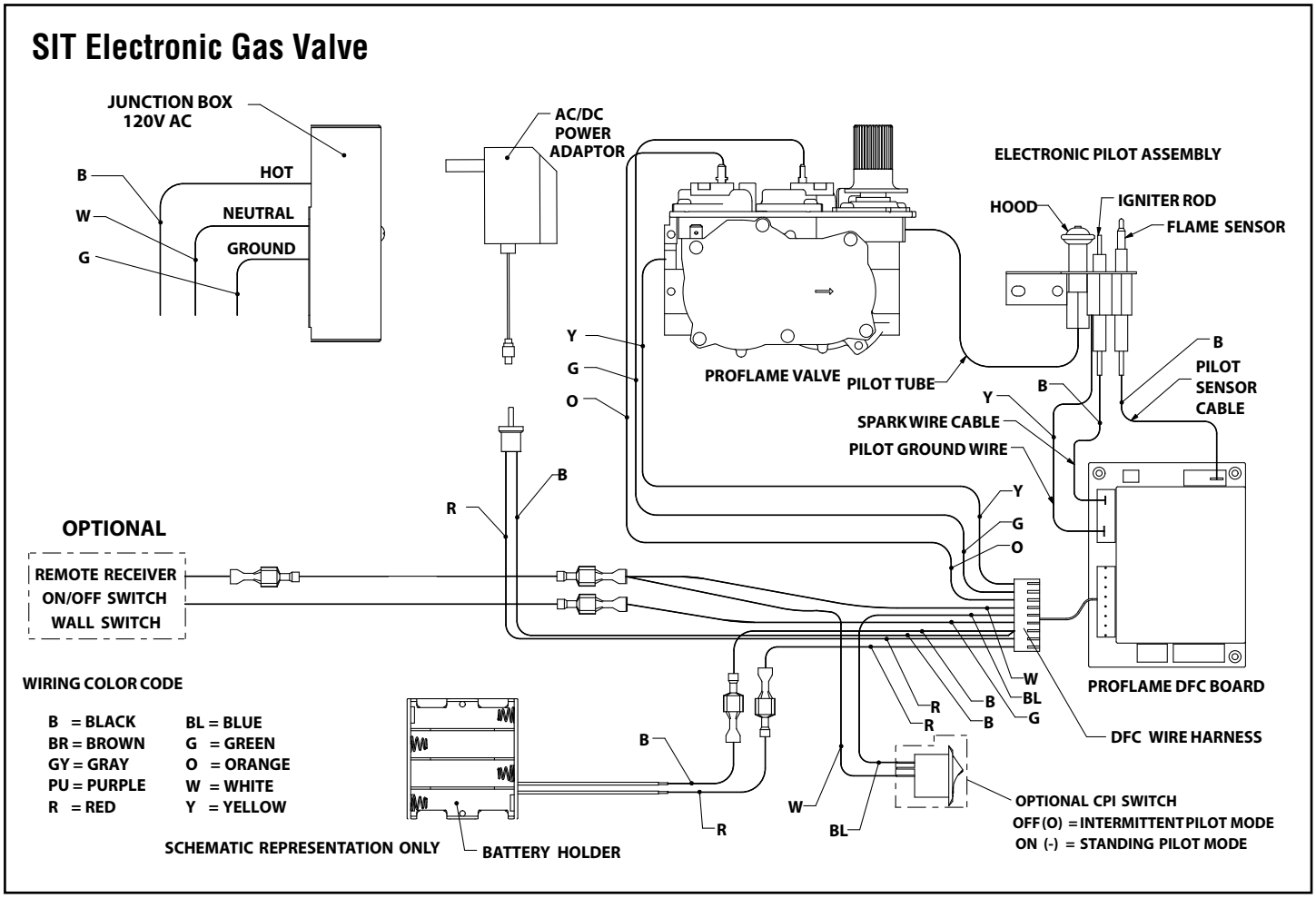

Electronic Wiring DRT4200-E series

One of the following optional controls must be used:

- ON/OFF Control
- Remote Control

NOTE: Electronic models must be connected to the main power supply.

1. Route a 3-wire, 120 Vac, 60 Hz, 1 ph power supply to the fireplace junction box.
2. Remove the electrical inlet cover plate from the side of the unit by removing the plate's securing screws *(**Table 12, Page 18**)*.
3. If unit is not supplied with a strain relief, remove the cover plate knockout. Then, feed the power supply wire through the knockout opening and into the unit junction box.
4. Connect the black power supply wire to the lower outlet's red pigtail lead *(**Figure 29, Page 40**)*. Connect the white power supply wire to the outlet's common terminal.
5. Connect the ground supply wire to the pigtail lead attached to the outlet's green ground screw. Restrain the inlet power lead per NEC or local codes.
6. The wall switch receiver for the Total Comfort Control™ remote control system connects directly to the gas valve, stepper motor, and fan control module with an umbilical cord wiring harness. Install a junction box (not provided) on the wall adjacent to the appliance, within reach of the remote system umbilical cord wiring harness.
7. After the wiring is complete, replace the cover plate.

Figure 30B - Wiring Diagram—Electronic Gas Valve DRT4200-E series

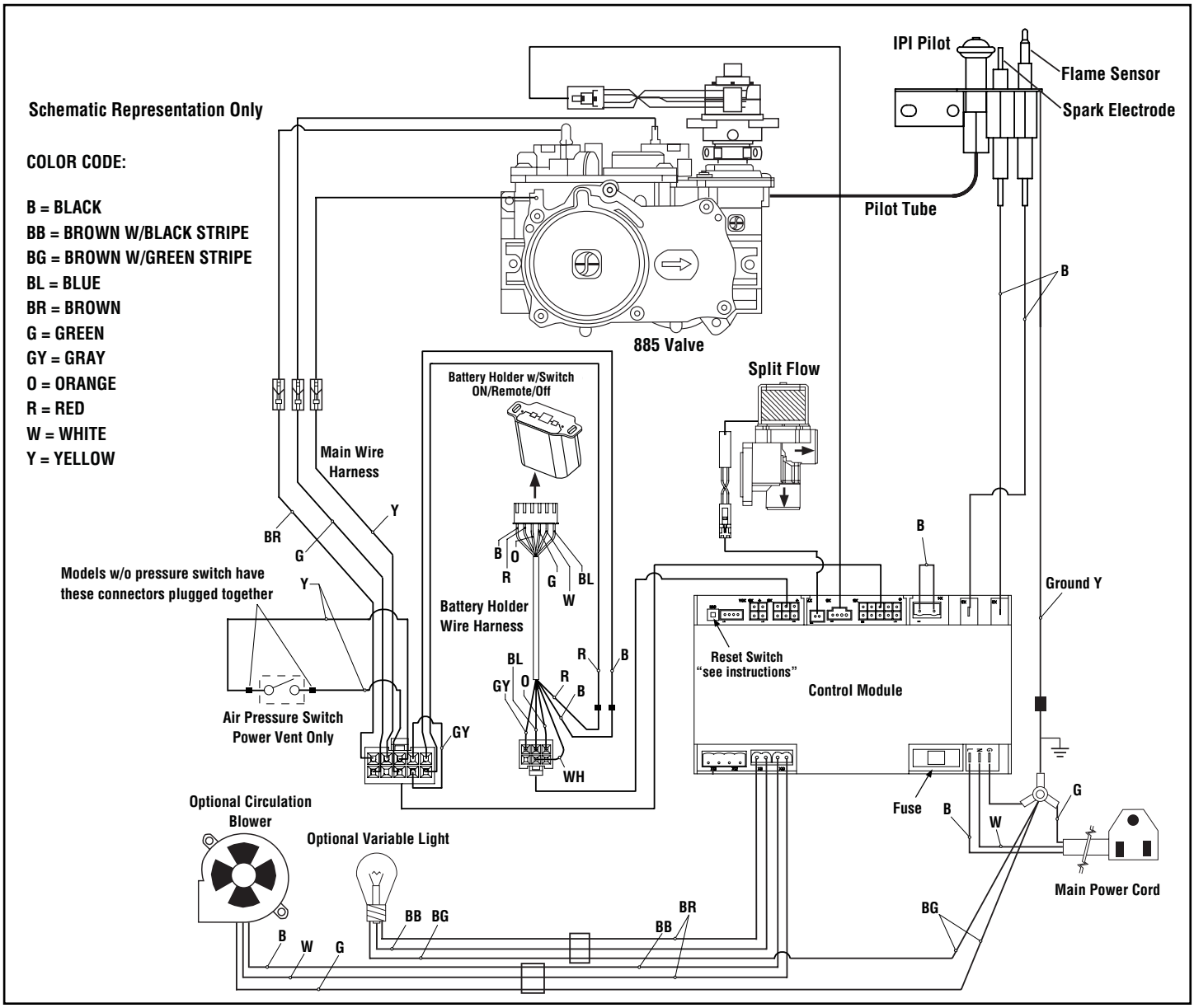

12. Connect the Gas Line

All codes require a shutoff valve mounted in the supply line. ***Figure 31*** illustrates two methods for connecting the gas supply. The flex-line method is acceptable in the U.S., however, Canadian requirements vary depending on locality. Installation must be in compliance with local codes.

NOTE: A sediment trap is recommended in the gas piping within the home to prevent moisture and debris in the line from damaging the valve.

NOTE: Secure all joints tightly using appropriate tools and sealing compounds (ensure propane resistant compounds are used in propane applications). Seal around the gas line to prevent cold air leakage. Gas line holes and other openings can be caulked or stuffed with unfaced fiberglass insulation.

Figure 31 - Gas Line Connection

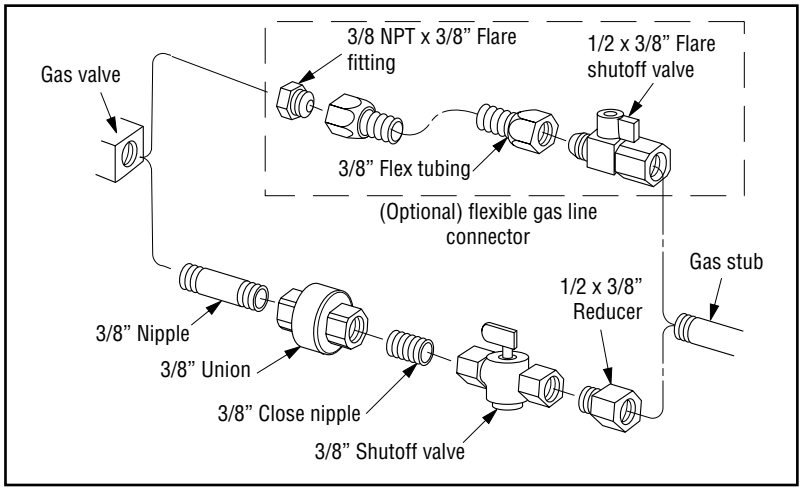

These fireplaces are equipped with a gas flex line for use (where permitted) in connecting the unit to the gas line. A gas flex line is provided to aid in attaching the direct-vent fireplace to the gas supply. The gas flex line can only be used where local codes permit. The flex line is rated for both natural and propane gas. A manual shut off valve is also provided with the flex line.

The gas control valve is located in the lower control compartment *(**Figures 1A and 1B, Page 9**)*.

Access the Control Compartment

See ***Page 57*** for instructions on **Accessing the Control Compartment**.

Secure all joints tightly using appropriate tools and sealing compounds (ensure propane resistant compounds are used in propane applications). Optionally, seal around the gas line to prevent cold air leakage. Gas line holes and other openings can be caulked or stuffed with unfaced fiberglass insulation.

All codes require a shutoff valve mounted in the supply line. The orientation of the shutoff valve should face the front. ***Figure 31, Page 43*** illustrates two methods for connecting the gas supply. A sediment trap is recommended to prevent moisture and debris in the gas line from damaging the valve.

Test Factory and Field Connections for Gas Leaks

⚠ WARNING

Never use an open flame to check for leaks.

Turn on gas supply and test for gas leaks, using a gas leak test solution—also known as bubble leak solution.

NOTE: Using a soapy water solution is an effective leak test solution but it is not recommended, because the soap residue that is left on the pipes/fittings can result in corrosion over time.

1. Light the fireplace (refer to the lighting instructions label in the control compartment or ***Pages 72-75***).
2. Brush all joints and connections with the gas leak test solution to check for leaks. If bubbles are formed, or gas odor is detected, turn off gas. Either tighten or refasten the leaking connection, and then retest as described above.
3. When the gas lines are tested and leak free, rinse off the leak testing solution.

13. Verify Proper Fireplace Operation

1. With the gas line installed, inspect the system before closing the front of the unit.
2. Follow the pilot lighting instructions:

- DRT4000-E series electronic systems ***Pages 72-73***
- DRT4200-E series electronic systems ***Pages 74-75***

NOTE: When lighting the fireplace for the first time, it will take a few minutes for the gas line to purge itself of air. When purged, the pilot and burner will light and operate as indicated. Subsequent lighting of the fireplace will not require purging. Inspect the pilot flame (carefully remove logs, if necessary).

Electronic Fireplace Inspection

To light the burner, turn ON the wall or remote control switch. Ensure the igniter lights the pilot. The pilot flame should engulf the thermocouple. Pilot should have two flames, one that engulfs the thermocouple and one that lights the burner *(see **Figure 32**)*.

Figure 32 - Electronic Pilot

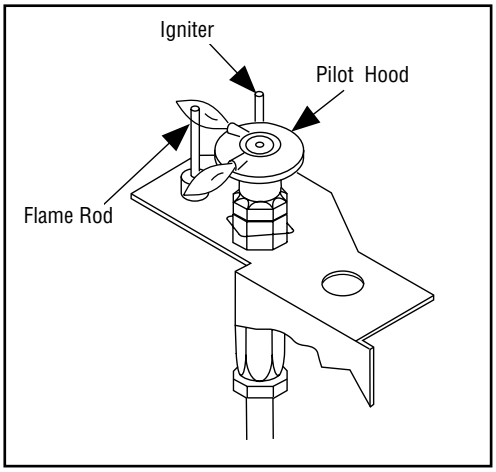

14. Initializing the Remote Control System (DRT4200-E models)

3. After completing fireplace installation, initialize the remote control system before operating the fireplace.
4. Insert the three (3) provided AAA batteries into the battery bay in the transmitter, taking care to correctly align polarity (+/ -).
5. Insert the four (4) provided AA batteries into the receiver battery bay (behind the wall switch plate), taking care to correctly align polarity (+/ -).
6. On the receiver, place the three-position slider switch in the REMOTE position *(**Figure 33A**).*
7. On the receiver front cover, insert the end of a paper clip (or other similar object; not provided) into the hole marked "PRG."

   The receiver will "beep" three times to indicate it is ready to synchronize with the transmitter.
8. On the transmitter, press the ON button. The receiver will "beep" four times to indicate acceptance of the transmitter's command (and set the receiver to the transmitter's specific code). The system is now initialized.

   The remote control system provides remote operation of the following fireplace functions:

- Primary burner ON/OFF
- Flame height and heat output adjustment (six levels)

The receiver accepts commands via radio frequency from the transmitter and does not require line-of-sight operation.

The slider switch on the receiver can be set to one of three positions:

- ON (manual override)
- OFF (manual override)
- REMOTE (remote control)

See the fireplace Care and Operation Instructions for detailed instructions on using the remote control system to operate the fireplace.

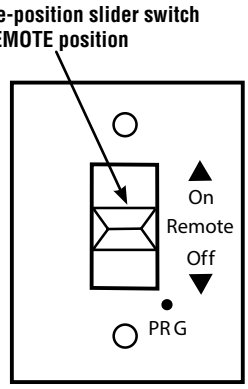

***Figure 33A** - Receiver (Wall Switch)*

***Figure 33B** - Transmitter (Remote Control)*

⚠ WARNING

Fire hazard. Can cause severe injury or death. The receiver causes ignition of the appliance. The appliance can turn on suddenly. Keep away from the appliance burner when operating the remote system or activating manual bypass of the remote system.

⚠ CAUTION

Property damage hazard. Excessive heat can cause property damage. The appliance can stay lit for many hours. Turn off the appliance if it is not going to be attended for any length of time. Always place the transmitter where children can not reach it.

15. Required Accessory: Install the Firebox Liners

1. See ***Page 59*** for instructions**: Installing the Firebox Liners**.

16. Install the Logs, Volcanic Stone, and Glowing Embers

1. See ***Pages 61–63*** for instructions on **Installing the logs, volcanic stone, and glowing embers**.

17. Install the Glass Door

1. See ***Pages 64–65*** for instructions on **Installing and removing the glass door**.

18. Adjust the Air Shutter to Ensure Proper Flame Appearance

⚠ WARNING

- **Air shutter adjustment should only be performed by a qualified professional service technician.**
- **Ensure glass door is in place and sealed during adjustment.**

⚠ CAUTION

- **Soot will be produced if the air shutter is closed too much. Any damage due to sooting, resulting from improperly setting the air shutter, is not covered under the warranty.**
- **The air shutter rod and nearby appliance surfaces are hot. Exercise caution to avoid injury while adjusting flame appearance.**

Flame Appearance and Sooting

The flame should be blue at the base, and yellow-orange in the body of the flame.

When the fireplace is first lit, the entire flame may be blue and will gradually turn yellow-orange during the first 15 minutes of operation. If the flame remains blue, or if the flame is orange with evidence of sooting (black tip), the air shutter opening may need to be adjusted.

If the air shutter opening is closed too far, sooting may develop. Sooting is indicated by black puffs developing at the tips of very long orange flames. Sooting results in black deposits forming on the logs, fireplace inside surfaces, and on exterior surfaces adjacent to the vent termination.

Sooting is caused by incomplete combustion in the flames and lack of combustion air entering the air shutter opening. To achieve a warm yellow-orange flame with an orange body that does not soot, the shutter opening must be adjusted between these two extremes.

Air Shutter Adjustment Guidelines

- If smoke or soot is present, first check the log set positioning to ensure that the flames are not impinging on any of the logs. If the log set is properly positioned and a sooting condition persists, then the air shutter should be opened more.
- The more offsets in the vent system, the wider the air shutter will need to be opened.
- An fireplace operated with the air shutter opened too far may have flames that appear blue and transparent. These weak, blue, and transparent flames are termed anemic.
- Propane models may exhibit flames that candle or appear stringy. If this condition is present and persists, adjust the air shutter to a more closed position, then operate the fireplace for a few more minutes to ensure that the flame normalizes and the flames do not appear sooty. The following chart is provided to help achieve the correct air shutter adjustment for your installation.

Table 28 - Air Shutter Adjustment Guidelines

Amount of Primary Air	Flame Color	Air Shutter Adjustment
If air shutter is closed too far →	Flame will be orange →	Air shutter gap should be increased
If air shutter is open too far →	Flame will be blue →	Air shutter gap should be decreased

Figure 34A - FRONT Air Shutter Setting

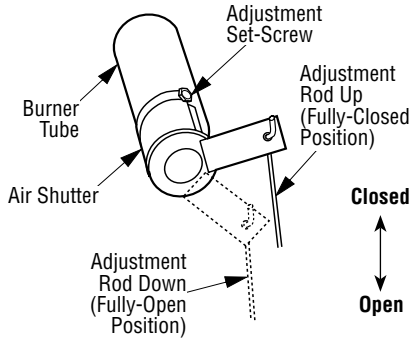

The adjustment rod for the front air shutter is located in the lower control compartment. See *Table 29* for the standard adjustment setting.

Figure 34B - REAR Air Shutter Setting

The adjustment lever for the rear air shutter is located in the lower control compartment. See *Tables 28 and 29* for the proper adjustment setting.

1. Adjust the air shutters per instructions in ***Figures 34A and 34B*** and ***Table 29***.
2. Light the fireplace. Follow the lighting procedure on the lighting label in the control compartment or ***Pages 72-75***.
3. Allow the burner to operate for at least fifteen (15) minutes while observing the flame continuously to ensure that the proper flame appearance is achieved *(**Figure 34C**)*. If the following conditions are present, adjust accordingly.
   - If flame appears sooty, adjust the air shutter, incrementally, to a more open position until the proper flame appearance is achieved.
   - If flame remains blue, adjust the air shutter, incrementally, to a more closed position until the proper flame appearance is achieved.
4. When satisfied that the burner flame appearance is normal, reinstall the lower control compartment door, then proceed to finish the installation.

Table 29 - Main Burner Shutter Opening—Factory Setting

Models	Natural Gas		Propane	
	Front Air Shutter	Rear Air Shutter	Front Air Shutter	Rear Air Shutter
All	1/16” (1.6 mm)	1/8” (3.2 mm)	1/8” (3.2 mm)	1/8” (3.2 mm)

Figure 34C - Burner Flame Appearance

19. Install the Hood after fireplace is cool

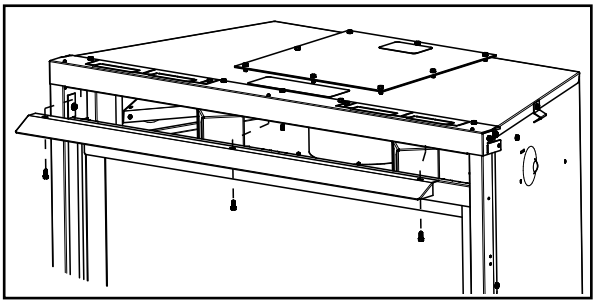

NOTE: All models must have a hood installed prior to operation.

The required optional facade includes the hood. Follow these instructions to install the hood.

NOTE: Hood is slotted and has some adjustment. It is suggested that the center screw should be installed first and the ends last.

1. Attach hood using three screws as shown here.

20. Installation / Re-installation of the required facade / barrier

⚠ WARNING

Reinstall any barrier removed before operating the fireplace. The barrier is designed to reduce the risk of burns from hot glass. Do not operate the fireplace without the barrier installed.

NOTE: All models must have a barrier installed prior to operation.

Facades

***NOTE**: A Facade / Barrier shall be purchased separately and installed prior to operation (**see Page 71**).*

Vista Frame

Facade Installation - Vista Facade *(see Figure 35)*

Install the facade by placing the hooks on the back of the facade above the four (4) shoulder screws and lowering the facade into place ***(see Figure 35)***.

Facade Replacement - Vista Facade *(see Figure 35A)*

Figure 35 **- Vista Facade Installation**

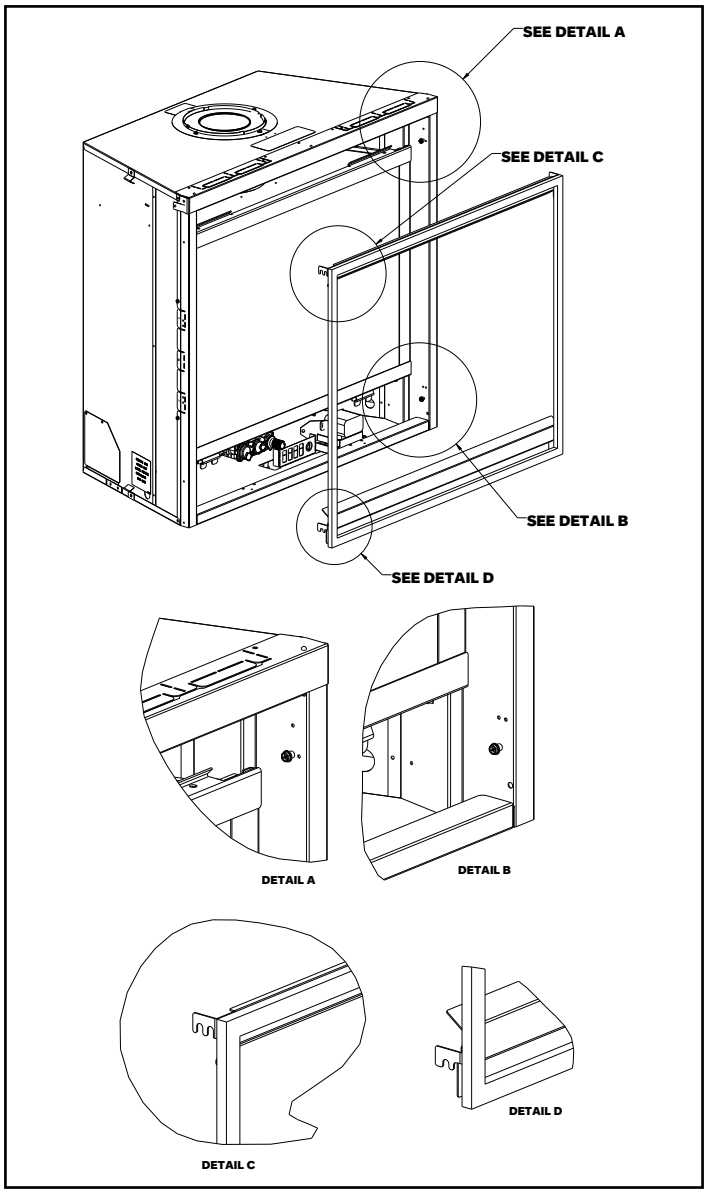

Figure 35A **- Facade Installation**

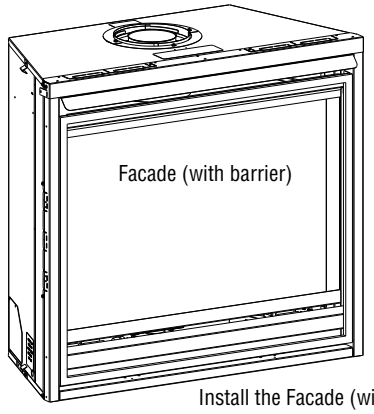

Install the Facade (with barrier).

NOTICE: All fireplaces *require a facade kit, which includes* a barrier to reduce the risk of burns from the hot viewing glass. This facade kit must be installed prior to operation.

Vista Replacement barrier catalog numbers are shown below.

40" Barrier - Cat. No. F5026
45" Barrier - Cat. No. F5027

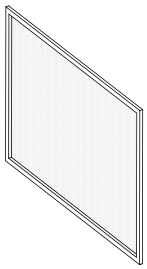

***NOTE**: If a Vista Facade barrier screen is damaged, replace the entire facade assembly."*

***NOTE**: Vista Frame facade will adjust out 1/2"; the Premium Craftsman, and Reflection facades will adjust out 1" to accommodate noncombustible finishing materials.*

Facade Installation - Premium Facades

If a replacement barrier screen is needed for your Premium Facade order the following base on the fireplaces size.

40" Barrier - Cat. No. F3666
45" Barrier - Cat. No. F3667

Installation of optional Premium Facades (see ***Page 71, ACCESSORY COMPONENTS*** for Premium Facade options).

1. Install the hood shipped with the Premium *(**Page 48**)*.
2. Installation of Premium Facades require relocation of the top (2) two shoulder screws as shown in ***Figure 35B***.
3. Once the top two (2) screws have been relocated, install the Premium Facade by placing the hooks on the back of the facade above the (4) four shoulder screws and lowering the facade into place.

Figure 35B **- Facade Installation**

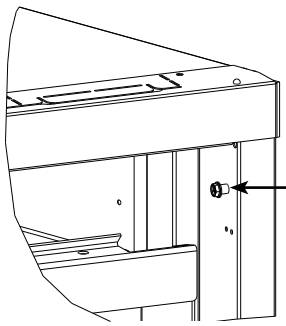

Relocate the (2) two top shoulder screws to the position shown.

Barrier Assembly Replacement (Craftsman and Reflection) - *See Figure 35C through 36E*

If the screen mesh barrier gets damaged it shall be replaced prior to operation of the fireplace.
Instructions will vary slightly depending on facade and unit size.
Retain all fasteners removed during disassembly, they will be reused.

1. Lay the façade face down on a soft, level, non-abrasive surface.
2. Using a 1/4" nut driver, remove screws around the perimeter of the barrier *(see **Figure 35E**)*.
   a. Craftsman: 6 screws, Reflection: 5 screws.
3. Craftsman and Reflection only: remove visual deflector attached by 3 screws *(see **Figure 35C**)*.
4. In one place on each side, bend retaining tab up to clear barrier *(see **Figure 35D**)*.
5. Using an 11/32" nut driver, remove lock nuts attaching visual deflector/barrier retainer *(see **Figure 35E**)*.
   a. Craftsman: 7 nuts, Reflection: 11 nuts.
6. Remove and discard damaged barrier assembly from the façade and replace with new barrier assembly.
7. Reassemble in reverse order of disassembly. Take care to not over-tighten nuts to prevent damage to the façade.
   NOTE: *Barrier assembly does not come pre-drilled for screws (from step two) and does not need to be. The sharp point on the screws will penetrate the barrier frame with downward pressure while turning the screw into place.*

Figure 35C - Facade Assembly

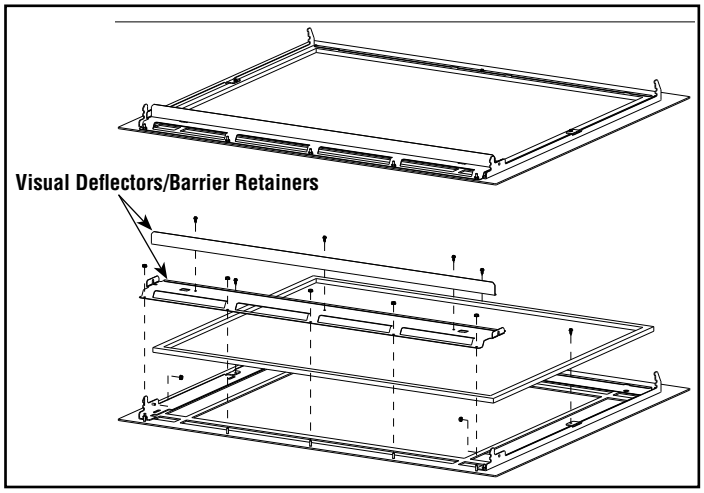

Figure 35D - Bend Retaining TAB UP

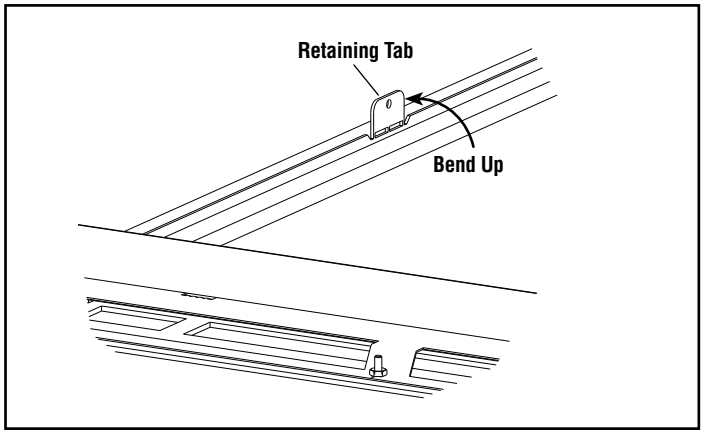

Figure 35E - Screws and Lock Nuts

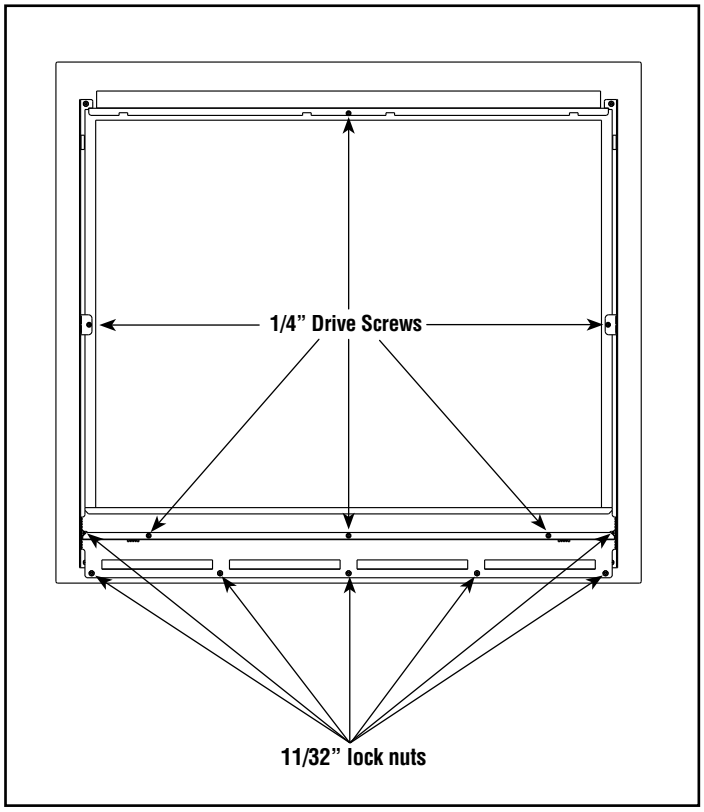

21. Install the Finishing Materials

1. Complete finished interior wall.
   NOTE: To install the fireplace facing flush with the finished wall, position framework to accommodate the thickness of the finished wall.
   NOTE: See **Cold Climate Insulation on *Page 11*** and **Vent Termination Clearances on *Page 13 and 14***.

22. Attach the Safety-in-Operation Warning Labels

1. Attach the furnished safety instruction labels at all fireplace operation and control points *(**Page 51**)*.
   NOTE: The installer MUST ensure these warnings are properly attached during installation. The warning labels are a critical means of informing consumers of safe operation practices.

Figure 37 - Combustible Wall Framing

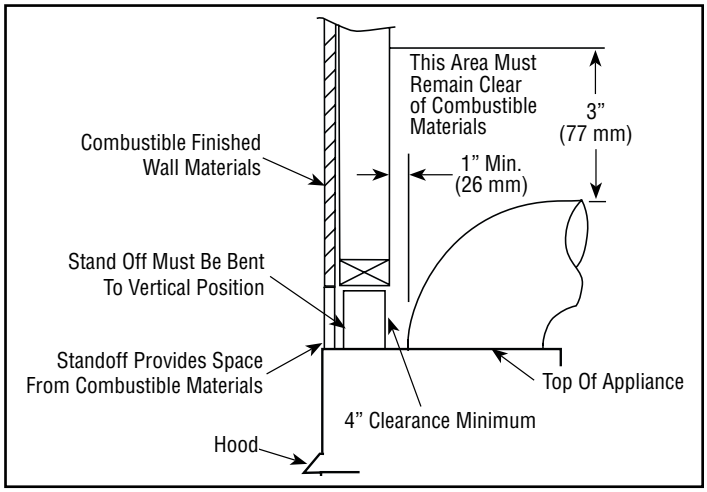

INSTALLER - ATTACHING SAFETY-IN-OPERATION WARNINGS

It is the installers responsibility to ensure these warnings are properly affixed during installation. These warning labels are a critical step in informing consumers of safe operation of this appliance.

ATTACHING SAFETY IN OPERATION WARNINGS

It is required that the safety instruction labels furnished with the fireplace be affixed to the operation and control point of the fireplace. A safety instruction label must be affixed to the wall switch plate where the fireplace is turned on and off *(See **Figure A**)* or wall thermostat + and if used on the remote control handheld transmitter *(**Figure B**)*. To properly complete the installation of this fireplace, locate the multi-lingual adhesive labels provided with the Care and Operation Instructions and proceed as follows:

1. Locate the wall switch or wall thermostat that controls the fireplace (verify the switch operates the fireplace by turning it on and off). Clean the wall switch plate or wall thermostat thoroughly to remove any dust and oils. Affix the label to the surface of the plate of the wall switch that controls the fireplace *(**Figure A**)* or the wall thermostat. Choose the language primarily spoken in the home. If unknown, affix the English language label.
2. If a remote control is used to control the fireplace, locate the transmitter and clean it thoroughly to remove any dust and oils. Affix the label to the surface of handheld transmitter *(**Figure B**)*. Choose the language primarily spoken in the home. If unknown, affix the English language label.
3. If you are unable to locate the labels, please contact IHP or your nearest IHP dealer to receive additional safety instruction labels free of charge.

   Cat. No. H8024 Replacement Label Kit

   IHP
   IHP.us.com

Note: English is red text on clear label. French and Spanish are white text on black label.

APPOSITION DES MISES EN GARDE RELATIVES À LA SÉCURITÉ D'UTILISATION

Il est impératif que les étiquettes de sécurité fournies avec le foyer soient collées à côté des dispositifs de contrôle du foyer. Une étiquette de sécurité doit être collée sur la plaque de l'interrupteur contrôlant l'allumage du foyer *(voir **Figure A**)* ou sur le thermostat mural et, le cas échéant, sur le boîtier de la télécommande *(**Figure B**)*. Pour achever l'installation correcte de ce foyer, procédez comme suit avec les étiquettes adhésives en langues étrangères fournies avec les instructions d'utilisation et d'entretien :

1. Repérez l'interrupteur ou le thermostat mural qui contrôle le foyer (vérifiez que l'interrupteur contrôle le fonctionnement du foyer en le faisant basculer de Marche à Arrêt, et vice-versa). Nettoyez soigneusement la plaque murale de l'interrupteur ou le thermostat mural pour éliminer la poussière et les traces de graisse ou d'huile. Collez l'étiquette sur la surface de la plaque de l'interrupteur mural qui contrôle le foyer *(**Figure A**)* ou du thermostat mural. Choisissez la langue qui est principalement parlée dans la résidence du propriétaire. En cas de doute, collez l'étiquette en anglais.
2. Si une télécommande est utilisée pour contrôler le foyer, nettoyez la soigneusement pour éliminer la poussière et les traces de graisse ou d'huile. Collez l'étiquette sur le boîtier de la télécommande *(**Figure B**)*. Choisissez la langue qui est principalement parlée dans la résidence du propriétaire. En cas de doute, collez l'étiquette en anglais.
3. Si vous ne parvenez pas à localiser les étiquettes, s'il vous plaît contactez IHP ou votre revendeur le plus proche pour recevoir IHP étiquettes d'instructions de sécurité supplémentaires gratuitement.

   Étiquettes de remplacement, n° cat. H8024

   IHP
   IHP.us.com

Remarque : Le texte anglais est rouge sur un support transparent. Le texte français et espagnol est blanc sur un support noir.

COLOCACIÓN DE ADVERTENCIAS DE SEGURIDAD EN OPERACIÓN

Se requiere que las etiquetas de instrucciones de seguridad incluidas con la chimenea se coloquen en el punto de operación y control de la misma. Se debe colocar una etiqueta de instrucciones de seguridad en la placa del interruptor de pared desde el cual se enciende y se apaga la chimenea *(ver la **Figura A**)* o en el termostato de pared y en el transmisor de control remoto *(**Figura B**)* si se usa. Para completar correctamente la instalación de esta chimenea, encuentre las etiquetas adhesivas multilingües incluidas con las instrucciones de cuidado y operación y haga lo siguiente:

1. Identifique el interruptor o el termostato de pared que controla la chimenea (verifique que el interruptor opera la chimenea encendiéndola y apagándola). Limpie bien la placa del interruptor o el termostato de pared para quitar el polvo y aceite. Pegue la etiqueta en la superficie de la placa del interruptor que controla la chimenea *(**Figura A**)* o en el termostato de pared. Seleccione el idioma que más se habla en la casa. Si no sabe cuál es, use la etiqueta en inglés.
2. Si se usa un control remoto para controlar la chimenea, encuentre el transmisor y límpielo bien para quitar el polvo y aceite. Pegue la etiqueta en la superficie del transmisor *(**Figura B**)*. Seleccione el idioma que más se habla en la casa. Si no sabe cuál es, use la etiqueta en inglés.
3. Si usted es incapaz de localizar las etiquetas, por favor póngase en contacto con IHP, o con su distribuidor más cercano IHP recibir instrucción etiquetas de seguridad adicionales sin costo.

   Juego de etiquetas de repuesto - Nº de cat. H8024

   IHP
   IHP.us.com

Nota: La etiqueta en inglés es transparente con texto rojo. Las etiquetas en francés y español son negras con texto blanco.

SAFETY LABEL DIAGRAMS

DIAGRAMMES DES ÉTIQUETTES DE SÉCURITÉ

DIAGRAMAS DE ETIQUETAS DE SEGURIDAD

Illustrations are for example only. Your accessories may be different.

Les illustrations sont par exemple uniquement. Vos accessoires peuvent être différents.

Las ilustraciones son sólo ejemplos. Tu accesorios pueden ser diferentes.

Figure A

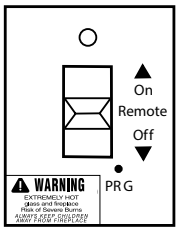

Figure B

INSTALLATION ACCESSORIES

IMPORTANT NOTE: The installation accessories shown in this section are part of the safety agency listing for the product models represented in this manual.

Listed Secure Vent® Components

	Cat. No.	Model	Description
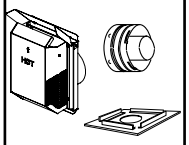	H1968	SV4.5HT-2	Horizontal Square Termination with Firestop/Spacer (H2246), and Adaptor (74L61)
	H2152	SV4.5CGV-1	Vertical Termination Cap, High Wind
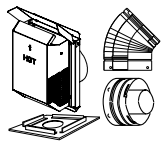	H8914	SV4.5TK90HT2	Horizontal Termination Kit HT-2 with 90° elbow
Vent Sections (Rigid)			
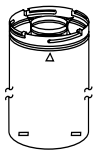	77L70	SV4.5L6	6” (152 mm)
	77L71	SV4.5L12	12” (305 mm)
	77L72	SV4.5L24	24” (610 mm)
	77L73	SV4.5L36	36” (914 mm)
	77L74	SV4.5L48	48” (1219 mm)
	77L75	SV4.5LA	Telescopic Length Slip Section (2 to 7-1/2” rigid)
	77L76	SV4.5E45	45° Elbow, Corrugated
	77L77	SV4.5E90	90° Elbow, Corrugated
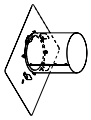	H5816 750,247M	SV4.5-TWSK10	Through Wall Shield Kit (to shield direct-vent pipe from blown insulation) (see 750247M)
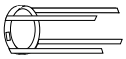	96K93	SV4.5SU	Support Strap
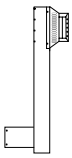	99L02	SV4.5HRK14	Horizontal Riser Kit, 14” (see 750146M)
	99L03	SV4.5HRK36	Horizontal Riser Kit, 36” (see 750146M)

	Cat. No.	Model	Description
	H6183	SV4.5HF5	Firestop Spacer, 5”, rigid
	H6184	SF4.5HF5	Firestop Spacer, 5”, flex
	H2246	SV4.5HF-10	Firestop/Spacer-Horizontal, rigid (3-1-1 spacing), 10 Pack
	H2247	SV4.5VF-10	Firestop/Spacer-Vertical, rigid (1-1-1 spacing), 10 Pack
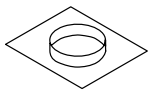	96K92	SV4.5SP	Support Plate
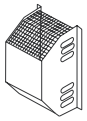	87L02	SV4.5HGS	Termination Guard for Horizontal Square Termination (Deluxe)(1 pack) (see 750055M)
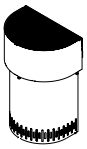	H5820	SV4.5HTSK	Termination Shroud (Guard) for Horizontal Square Termination (1 pack) (see 750246M)
	H3907	SV4.5ARSA	Attic Insulation Shield with adjustable height, 12 to 22”
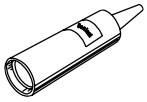	10K81	SFMP	Mill-Pac, Black, High-Temperature Sealant
	89L40	SFMP-12	Mill-Pac, Black, High-Temperature Sealant (bulk 12-pack)
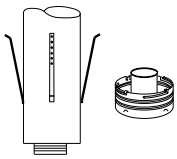	F3191	SV4.5AdaptorKit	Secure Flex Adaptor Kit *Includes rigid to flex adaptor and flex to rigid adaptor (flex not included)*
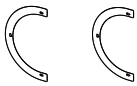	F5061	----	Vent Cover Plates

INSTALLATION ACCESSORIES (continued)

Listed Secure Flex® Components

	Cat. No.	Model	Description
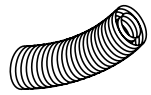	60L10	SF-18	18 ft (5.49 m)* compressed flex (see 750053M)
	98K03	SF-12	12 ft (3.66 m)*compressed flex (see 750052M)
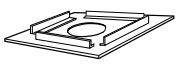	H2248	SF4.5HF-10	Firestop/Spacer, Horizontal, flex (3-1-1 spacing), 10 Pack
	H2249	SF4.5VF-10	Firestop/Spacer, Vertical, flex (1-1-1 spacing),10 Pack
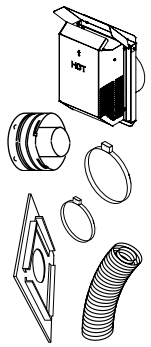	H1969	SF4.5HT-2	Horizontal Square Termination for flex (without flex)
	77L87	SFKIT12S	Square Term. for flex with 12” (305 mm)* compressed flex
	77L88	SFKIT18S	Square Term. for flex with 18” (457 mm)* compressed flex
	77L89	SFKIT24S	Square Term. for flex with 24” (610 mm)* compressed flex
	77L90	SFKIT36S	Square Term. for flex with 36” (914 mm)* compressed flex
	77L91	SFKIT48S	Square Term. for flex with 48” (1219 mm)* compressed flex
	91L66	SFGC4-6	Gear Clamp 4.5” (114 mm) for flex (6-pack)
	91L67	SFGC7-6	Gear Clamp 7.5” (190.5 mm) for flex (6 pack)

	Cat. No.	Model	Description
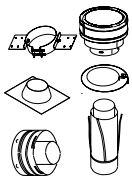	56L74	SFVT30	Vertical Termination for flex (flat to 6/12) with flex adaptor, section of rigid vent, roof support collar assembly, roof flashing and storm collar. (see 750052M)
	56L75	SFVT45	Vertical Termination for flex (6/12 to 12/12) with flex adaptor, section of rigid vent, roof support collar assembly, roof flashing and storm collar. (see 750052M)
	H7748	H7748	36” Flex Connector Kit. 36” of flex with two adaptors for mating two rigid sections of vent together.

*All compressed flex vents can be expanded up to two times.

GAS CONVERSION KITS

⚠ WARNING

This conversion kit shall be installed by a qualified service agency in accordance with the manufacturer's instructions and all applicable codes and requirements of the authority having jurisdiction. If the information in these instructions is not followed exactly, a fire, explosion, or the production of carbon monoxide may result; causing property damage, personal injury, or loss of life. The qualified service agency is responsible for the proper installation of this kit. The installation is not proper and complete until the operation of the converted appliance is checked as specified in the manufacturer's instructions supplied with the kit. The qualified service agency performing this installation assumes responsibility for this conversion.

⚠ AVERTISSEMENT

Cette trousse de conversion doit être installée par un technicien agréé, selon les instructions du fabricant et selon toutes les exigences et tous les codes pertinents de l'autorité compétente. Assurez-vous de bien suivre les instructions dans cette notice pour réduire au minimum le risque d'incendie, d'explosion ou la production de monoxyde de carbone pouvant causer des dommages matériels, des blessures ou la mort. Le tecnicien agréé est responsable de l'installation de cette trousse. L'installation n'est pas adéquate ni complète tant que le bon fonctionnement de l'appareil converti n'a pas été vérifié selon les instructions du fabricant fournies avec la trousse. Le fournisseur de service qualifié ayant réalisé l'installation assume les responsabilités liées à la conversion.

In Canada:

The conversion shall be carried out in accordance with the requirements of the provincial authorities having jurisdiction and in accordance with the requirements of the CAN/CGA-B149.1 Installation code.

La conversion devra être effectuée conformément aux recommandations des autorités provinciales ayant juridiction et conformément aux exigences du code d'installation CAN/CGA-B149.1.

Gas conversion kits are available to adapt your fireplace from the use of one type of gas to the use of another. These kits contain all the necessary components needed to complete the task including labeling that must be affixed to ensure safe operation.

Refer to the instructions provided with the conversion kit when performing any gas conversion.

Install gas conversion kits per instruction provided in kits.

DRT4000-E Series

Electronic Systems, Natural Gas To Propane Gas Conversion Kits (S.I.T. systems - Proflame 1)		
Fireplace Models	**Model**	**Catalog Number**
40" Models	GCKSIT4040ENP	F4311
45" Models	GCKSIT4045ENP	F4315

Electronic Systems, Propane Gas To Natural Gas Conversion (S.I.T. systems - Proflame 1)		
Fireplace Models	**Model**	**Catalog Number**
40" Models	GCKSIT4040EPN	F4312
45" Models	GCKSIT4045EPN	F4316

DRT4200-E Series

Electronic Systems, Natural Gas To Propane Gas Conversion Kits (S.I.T. systems - Proflame 2)		
Fireplace Models	**Model**	**Catalog Number**
40" Models	GCKSIT4240ENP	F4313
45" Models	GCKSIT4245ENP	F4317

Electronic Systems, Propane Gas To Natural Gas Conversion (S.I.T. systems - Proflame 2)		
Fireplace Models	**Model**	**Catalog Number**
40" Models	GCKSIT4240EPN	F4314
45" Models	GCKSIT4245EPN	F4318

OPERATION

⚠ WARNING

Young children should be carefully supervised when they are in the same room as the appliance. Toddlers, young children and others may be susceptible to accidental contact burns. A physical barrier is recommended if there are at risk individuals in the house. To restrict access to a fireplace or stove, install an adjustable safety gate to keep toddlers, young children and other at risk individuals out of the room and away from hot surfaces.

⚠ AVERTISSEMENT

Les jeunes enfants devraient être surveillés étroitement lorsqu'ils se trouvent dans la même pièce que l'appareil. Les tout petits, les jeunes enfants ou les adultes peuvent subir des brûlures s'ils viennent en contact avec la surface chaude. Il est recommandé d'installer une barrière physique si des personnes à risques habitent la maison. Pour empêcher l'accès à un foyer ou à un poêle, installez une barrière de sécurité; cette mesure empêchera les tout petits, les jeunes enfants et toute autre personne à risque d'avoir accès à la pièce et aux surfaces chaudes.

⚠ WARNING

Reinstall any barrier removed before operating the fireplace. The barrier is designed to reduce the risk of burns from hot glass. Do not operate the fireplace without the barrier installed.

⚠ WARNING

Do not operate the fireplace if:

- **The glass front is removed, cracked, or broken**
- **The surround trim assembly and screen are not installed**

CARBON MONOXIDE POISONING: Early signs of carbon monoxide poisoning are similar to the flu with headaches, dizziness and/or nausea. If you have these signs, obtain fresh air immediately. Turn off the gas supply to the appliance and have it serviced by a qualified professional, as it may not be operating correctly. Some people are more affected by carbon monoxide than others, including pregnant women, people with heart or lung disease or anemia, those under the influence of alcohol, and those at high altitudes.

NOTE: Do not place furniture or other combustible materials within 36" of the front of viewing area(s).

NOTE: Children and adults should be alerted to the hazards of high surface temperature and should stay away to avoid burns or clothing ignition.

Remarqué : Les enfants et les adultes devraient être infor-més des dangers que posent les températures de surface élevées et se tenir à distance afin d'éviter des brûlures ou que leurs vêtements ne s'enflamment.

NOTE: Installation and repair should be done by a qualified service person. The fireplace should be inspected before use and at least annually by a professional service person. More frequent cleaning may be required due to excessive lint from carpeting, bedding material, etcetera. It is imperative that control compartments, burners and circulating air passageways of the fireplace be kept clean.

Remarqué : L'installation et la réparation devrait être confiées à un technicien qualifié. L'appareil devrait faire l'objet d'une inspection par un technicien professionnel avant d'être utilisé et au moins une fois l'an par la suite. Des nettoyages plus fréquents peuvent être nécessaires si les tapis, la literie, et cetera produisent une quantité importante de pous-sière. Il est essentiel que les compartiments abritant les commandes, les brûleurs et les conduits de circulation d'air de l'appareil soient tenus propres.

NOTE: Do not use these fireplaces if any part has been under water. Immediately call a qualified, professional service technician to inspect the fireplace and to replace any parts of the control system and any gas control which have been under water.

Remarqué : Ne pas utiliser cet appareil s'il a été plongé, même partiellement, dans l'eau. Appeler un technicien qualifié pour inspecter l'appareil et remplacer toute partie du système de commande et toute commande qui a été plongée dans l'eau.

ATTACHING SAFETY IN OPERATION WARNINGS

Your fireplace has been furnished with safety instruction labels that are to be affixed to the operation and control point of the fireplace. A safety instruction label should be affixed to the wall switch plate where the fireplace is turned on and off *(See **Figure A**)* or wall thermostat and if used on the remote control handheld transmitter *(**Figure B**)*. The warnings should already have been put in place when the fireplace initial set-up was completed. If they are not affixed at these spots, locate the multi-lingual adhesive labels provided with these instructions and proceed as follows:

1. Locate the wall switch or wall thermostat that controls the fireplace (verify the switch operates the fireplace by turning it on and off). Clean the wall switch plate or wall thermostat thoroughly to remove any dust and oils. Affix the label to the surface of the plate of the wall switch that controls the fireplace *(**Figure A**)* or the wall thermostat. Choose the language primarily spoken in the home.
2. If a remote control is used to control the fireplace, locate the transmitter and clean it thoroughly to remove any dust and oils. Affix the label to the surface of handheld transmitter (***Figure B***). Choose the language primarily spoken in the home.
3. If you are unable to locate the labels, please contact IHP or your nearest IHP dealer to receive additional safety instruction labels free of charge.

   Cat. No. H8024 Replacement Label Kit

   IHP
   IHP.us.com

Note: English is red text on clear label. French and Spanish are white text on black label.

APPOSITION DES MISES EN GARDE RELATIVES À LA SÉCURITÉ D'UTILISATION

Votre foyer a été livré avec des étiquettes de sécurité qui doivent être collées à côté des dispositifs de contrôle du foyer. Une étiquette de sécurité doit être collée sur la plaque de l'interrupteur contrôlant l'allumage du foyer *(voir **Figure A**)* ou sur le thermostat mural et, le cas échéant, sur le boîtier de la télécommande *(**Figure B**)*. Les mises en garde auraient dû être collées au moment de l'installation initiale du foyer. Si ce n'est pas le cas, prenez les étiquettes adhésives multilingues fournies avec ces instructions et procédez comme suit:

1. Repérez l'interrupteur ou le thermostat mural qui contrôle le foyer (vérifiez que l'interrupteur contrôle le fonctionnement du foyer en le faisant basculer de Marche à Arrêt, et vice-versa). Nettoyez soigneusement la plaque murale de l'interrupteur ou le thermostat mural pour éliminer la poussière et les traces de graisse ou d'huile. Collez l'étiquette sur la surface de la plaque de l'interrupteur mural qui contrôle le foyer *(**Figure A**)* ou du thermostat mural. Choisissez la langue qui est principalement parlée dans la résidence du propriétaire.
2. Si une télécommande est utilisée pour contrôler le foyer, nettoyez la soigneusement pour éliminer la poussière et les traces de graisse ou d'huile. Collez l'étiquette sur le boîtier de la télécommande *(**Figure B**)*. Choisissez la langue qui est principalement parlée dans la résidence du propriétaire.
3. Si vous ne parvenez pas à localiser les étiquettes, s'il vous plaît contactez IHP ou votre revendeur le plus proche pour recevoir IHP étiquettes d'instructions de sécurité supplémentaires gratuitement.

   Étiquettes de remplacement, n° cat. H8024

   IHP
   IHP.us.com

Remarque : Le texte anglais est rouge sur un support transparent. Le texte français et espagnol est blanc sur un support noir.

COLOCACIÓN DE ADVERTENCIAS DE SEGURIDAD EN OPERACIÓN

Su chimenea incluye etiquetas de instrucciones de seguridad que deben colocarse en el punto de operación y control de la chimenea. Se debe colocar una etiqueta de instrucciones de seguridad en la placa del interruptor de pared desde el cual se enciende y se apaga la chimenea *(ver la **Figura A**)* o en el termostato de pared y en el transmisor de control remoto *(**Figura B**)* si se usa. Las advertencias ya deben haberse colocado cuando se completó la instalación inicial de la chimenea. Si no están colocadas en estos lugares, encuentre las etiquetas adhesivas multilingües proporcionadas con estas instrucciones y prosiga de la siguiente manera:

1. Identifique el interruptor o el termostato de pared que controla la chimenea (verifique que el interruptor opera la chimenea encendiéndola y apagándola). Limpie bien la placa del interruptor o el termostato de pared para quitar el polvo y aceite. Pegue la etiqueta en la superficie de la placa del interruptor que controla la chimenea *(**Figura A**)* o en el termostato de pared. Seleccione el idioma que más se habla en la casa.
2. Si se usa un control remoto para controlar la chimenea, encuentre el transmisor y límpielo bien para quitar el polvo y aceite. Pegue la etiqueta en la superficie del transmisor *(**Figura B**)*. Seleccione el idioma que más se habla en la casa.
3. Si usted es incapaz de localizar las etiquetas, por favor póngase en contacto con IHP, o con su distribuidor más cercano IHP recibir instrucción etiquetas de seguridad adicionales sin costo.

   Juego de etiquetas de repuesto - Nº de cat. H8024

   IHP
   IHP.us.com

Nota: La etiqueta en inglés es transparente con texto rojo. Las etiquetas en francés y español son negras con texto blanco.

SAFETY LABEL DIAGRAMS

DIAGRAMMES DES ÉTIQUETTES DE SÉCURITÉ

DIAGRAMAS DE ETIQUETAS DE SEGURIDAD

Illustrations are for example only. Your accessories may be different.

Les illustrations sont par exemple uniquement. Vos accessoires peuvent être différents.

Las ilustraciones son sólo ejemplos. Tu accesorios pueden ser diferentes.

Figure A

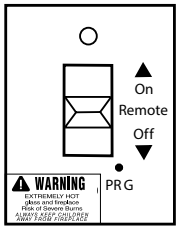

Figure B

Burn-in Period

The first few times this fireplace is operated, there will be an odor from the curing of paint and the burning off of the lubricants used in the manufacturing process. Depending on usage, the burn-in period may take a few hours or a few days.

NOTE: Ventilate the site during the burn-in period. The resulting odor and haze may set off a smoke detector. Do not operate the blower during the burn-in period.

A white film may develop on the glass front during the first few fires as part of the burn-in period. The glass should be kept clean during the burn-in period to prevent the film from baking on—making it very difficult to remove (**Cleaning the glass door on *Page 66***).

Accessing the Control Compartment and Removal of Facade

Accessing the control compartment area and removal of the facade:

1. Place your fingers under the bottom center of the facade. See ***Figure 37A (1)***.
2. Slowly lift up the facade until the bottom becomes free from the lower shoulder screws. See ***Figure 37A (2)***.
3. Slightly swing the bottom of the facade away from the fireplace and grasp each side of the facade. Lift to remove from the top shoulder screws. Place the facade in a safe area until it is ready for re-installation.

THE FACADE SHALL BE INSTALLED PRIOR TO OPERATION OF THE FIREPLACE.

Repeat these steps in reverse to install the facade onto the fireplace.

Figure 37A - Accessing the Control Compartment

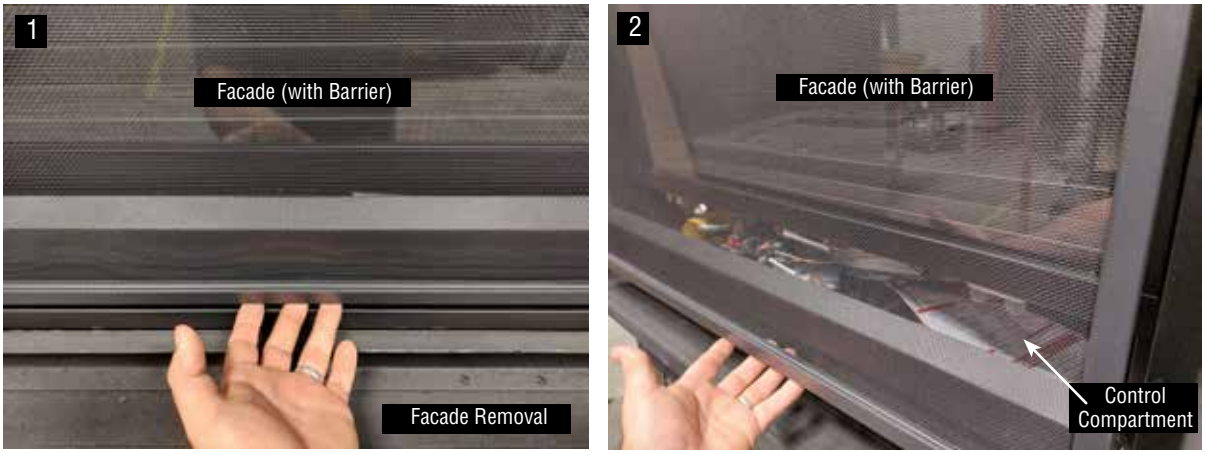

Electronic Fireplaces

Detailed lighting instructions are found on ***Pages 72-75***. Also, electronic fireplace lighting instructions are found on the pull-out lighting instructions attached to the gas control valve.

If the electronic fireplace is equipped with an remote wall switch or remote control, the fireplace main burner can be turned ON/OFF with the wall switch or remote control.

To light the fireplace in a power outage:

1. Confirm that batteries are installed in the Wall Switch
2. Set the unit-mounted switch, or wall switch to the ON Position.
3. The unit should spark at the pilot and light.

   NOTE: If there is no spark, replace the batteries.
4. Operate the fireplace normally.

Installing the Backup Batteries

With a battery backup, electronic fireplaces can automatically switch to battery power. In the event of a power outage, this allows ON/OFF operation (without blower functionality). Install new batteries before every burn season.

DRT4000-E series

1. Open the control compartment door (Page 56), and locate the battery holder.
2. Install four (4) AA batteries in the battery holder.
3. Close the control compartment door.

DRT4200-E series

1. Locate the remote receiver/ switch box. (this could be installed on a wall and require the removal of a cover plate)
2. Open the battery box door and Install four (4) AA batteries in the battery holder.
3. Close battery box door and replace wall cover plate (if removed)

Continuous Pilot Ignition Operation

Fireplaces with an electronic gas valves have a continuous pilot ignition (CPI) controlled by the remote on the 4200 series and a switch on the 4000 series

This switch allows the pilot to be switched from intermittent mode to continuous mode:

- Intermittent Mode—The pilot is extinguished when the fireplace is OFF.
- Continuous Mode—The pilot stays ON when the fireplace is OFF.
- Fireplaces with an electronic gas valves have a continuous pilot ignition (CPI) controlled by the remote on the 4200 series and a switch on the 4000 series
- To save energy—switch to intermittent mode.
- For a standing pilot that will help prevent glass door condensation and cycle startup—switch to continuous mode.

NOTE: Continuous mode is indicated by a pilot that comes ON and remains lit when the fireplace is OFF.

Installing the Firebox Liners *(see next page for more information)*

1. Remove the three (3) optional firebox liner panels from the packing materials if purchased.
2. Carefully position the rear panel, upper edge first, in the firebox against the rear wall.
3. While holding the rear panel, carefully position the left side panel in the firebox.
4. Carefully position the right side panel in the firebox.

NOTE: Do not force the panels. Excessive force may cause breakage. If the panels are correctly positioned, they will fit snugly in place.

Installing the Firebox Liners with Brackets

KIT CONTENTS

1 ea. Set of 4 Hand Bend Brackets
1 ea. Set of Optional Fiber Panels
1 ea. Installation Instructions

TOOLS / SUPPLIES NEEDED

Leather Gloves

GENERAL INFORMATION

FIELD SERVICE UPGRADES SHALL ONLY BE COMPLETED BY A QUALIFIED SERVICE TECHNICIAN

The four (4) hand bend brackets are included to prevent movement of the fiber firebox panels.

If you encounter any problems, need clarification of these instructions or are not qualified to properly install this kit, contact you local distributor or dealer.

Read this instruction sheet in its entirety before beginning the installation.

ALL WARNINGS AND PRECAUTIONS IN THE INSTALLATION AND OPERATION MANUAL PROVIDED WITH THE APPLIANCE APPLY TO THESE INSTRUCTIONS.

TURN OFF THE APPLIANCE AND ALLOW IT TO COMPLETELY COOL BEFORE PROCEEDING.

Check the contents of the kits upon receipt and check for any damaged or missing parts. If there is hidden damage, notify your freight company or IHP dealer immediately.

⚠ CAUTION

SHARP EDGES - WATCH YOUR FINGERS

Wear gloves to guard against any sharp metal edges.

INSTALLATION INSTRUCTIONS

1. After removing *Barrier and/or Facade* and *Glass Door* per the fireplace user manual instructions, install the rear fiber panel centered and flush to the firebox rear panel (shorter bricks down) *(see **Figure 39A**).*
2. Take Out the four brackets from the sheet metal set by bending the sheet metal until the retaining tabs are broken free.

   WATCH YOUR FINGERS! WEAR GLOVES!

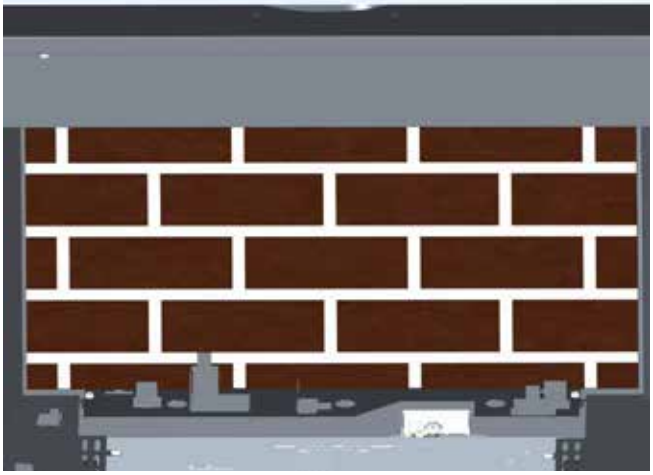

Figure 39A - Install Rear Fiber Panel

3. Pre-bend a bracket and insert the top leg of the bracket between the lintel and top panel as shown in ***Figure 39B***.
4. Install the side fiber panel by sliding it between the lintel and side panel inserting the bottom rear edge first. Verify grout line alignment between side and rear fiber panels.

   CAUTION: Handle the fiber panels with care upon installation to avoid cracks

5. Hand bend the front top bracket by gently pushing the tab over the fiber panel edge as shown in ***Figure 39C***.
6. Install the second fiber side panel by following instructions 3 to 7 bending the brackets to the mirror direction shown on ***Figures 39B and 39C, Page 60.***
7. Verify the alignment of the the side fiber panels with the rear panel and install the glass door and barrier and/or facade following the instructions in the fireplace User Manual.

Installing the Firebox Liners *(continued)*

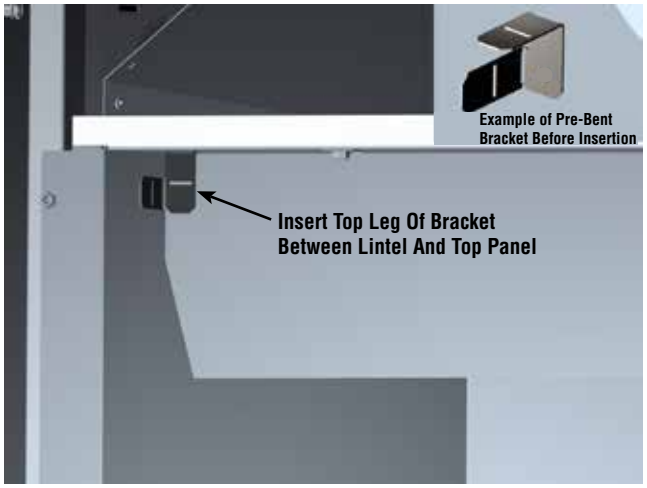

Figure 39B

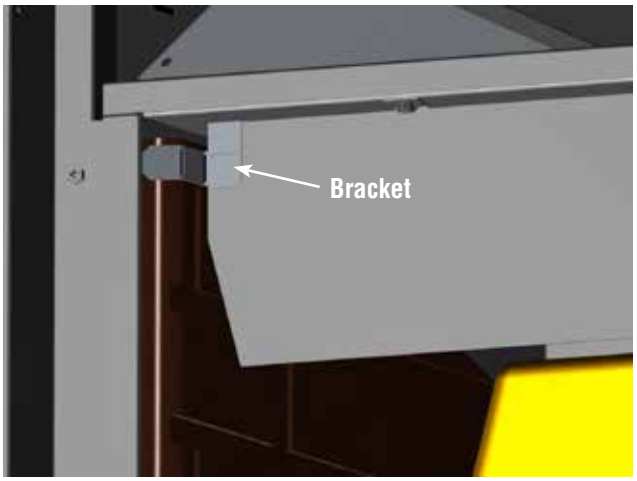

Figure 39C - Brackets Installed

Install the Logs, Volcanic Stone, and Glowing Embers

⚠ WARNING

- **Turn OFF all gas and electricity to the appliance before installing the volcanic stone, embers, and logs.**
- **Do NOT install the logs until the appliance has been completely installed, the gas line connected and tested for leaks, and the initial burner operation has been confirmed.**
- **Use of an unapproved log set in the fireplace will void the warranty and will result in incomplete combustion, sooting, and poor flame quality.**
- **Logs get very hot and remain hot for up to one hour after the gas supply is turned OFF. Handle the logs only when cool.**
- **This appliance is not designed to burn wood. Any attempt to do so could cause irreparable damage to appliance and prove hazardous.**
- **If the logs are not installed according to these instructions, improper combustion could occur. This could result in the excessive production of soot and/or the colorless, odorless, toxic gas carbon monoxide (CO).**

NOTE: It is important to ensure proper log placement per the manual when installing these units. Verify pilot flame is not obstructed. See Verifying Appliance Operation on ***Page 44***.

NOTE: If applicable, install the firebox liner before placing the stone. Logs can be installed after the volcanic stone.

Installing the volcanic stone, and glowing embers

1. If necessary, remove the glass door *(**Pages 64-65**)*.
2. Spread the decorative volcanic stone in a pleasing pattern on the firebox floor along the slope and to the back right and left sides of the burner *(**Figure 40**)*.

   NOTE: Do not place stone on the burner.
3. Separate and fluff the glowing embers into pieces approximately the size of a quarter *(**Figure 41**)*.

Figure 40 - Install volcanic stone

Figure 41 - Separate glowing embers

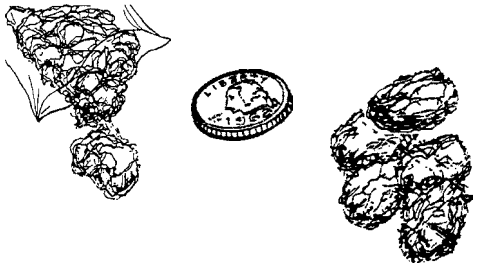

4. Position the separated glowing embers over the small holes on the burner surface as shown in ***Figure 42***. Do NOT cover the large burner slots.

Figure 42 - Install glowing embers

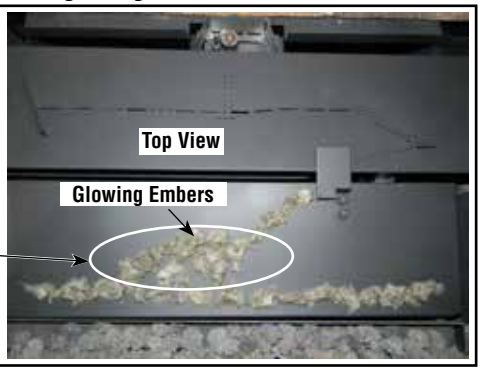

NOTE: DRT2000 models; Placing embers in this area will reduce glow on middle log.

Figure 42A - Install glowing embers

NOTE: Enough glowing ember material is provided for several applications. For best glowing effect, replace the ember material annually.

Installing the DRT4200-E & DRT4000-E series 40” and 45” logs

The logs have notches/tabs to assist proper positioning. Upper logs rest on lower logs via notches/tabs. Proper log placement is critical to prevent sooting. Place the logs in the gaps between flame peaks, so they do not impinge the flames. Follow the log placement instructions precisely.

NOTE: Do not cover the burner ports.

Table 30 - 40” and 45” Log Sets

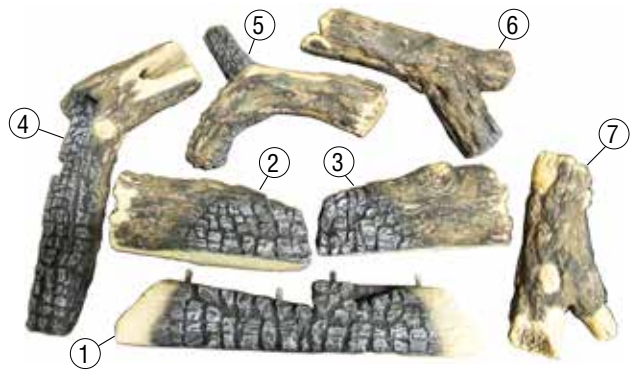

Log Number	Description
1	Bottom Rear Log
2	Upper Left Rear Log
3	Upper Right Rear Log
4	Middle Left Log
5	Front Left Forked Log
6	Front Right Forked Log
7	Upper Right Forked Log

Catalog number for the entire set:
J8301 - 40”; J8303 - 45”

1. If necessary, remove the glass door *(**Page 64-65**)*.
2. Position the rear log #1 *(**Figure 44**)* on the two rear setting pins shown in ***Figure 43***.

Figure 43 - Locate log setting pins

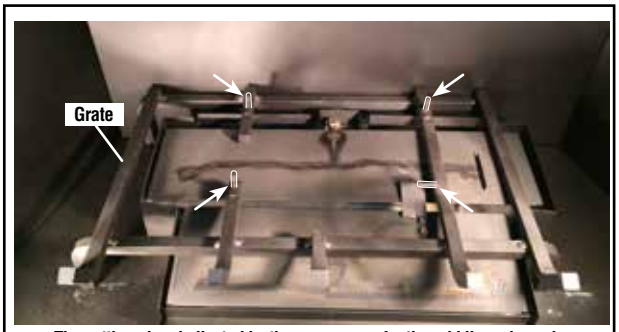

The setting pins, indicated by the arrows, are for the middle and rear log.

Figure 44 - Place log #1

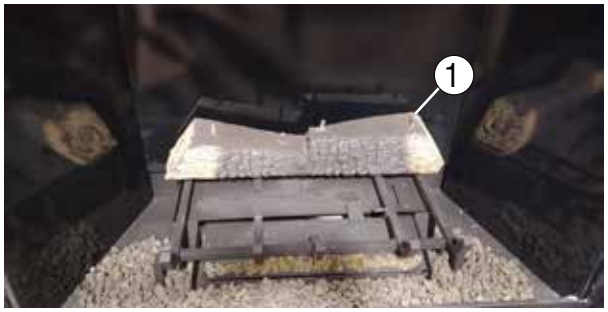

3. Place the left rear log #2 *(**Figure 45**)* over the 2 left pins on log #1 *(**Figure 44**)*.
4. Place the upper right rear log #3 *(**Figure 46**)* over the 2 right pins on log #1 *(**Figure 44**)*.

Figure 45 - Place log #2

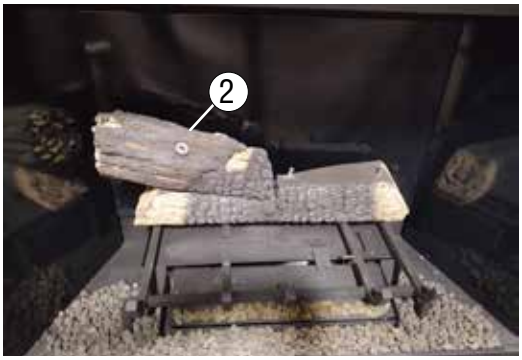

Figure 46 - Place log #3

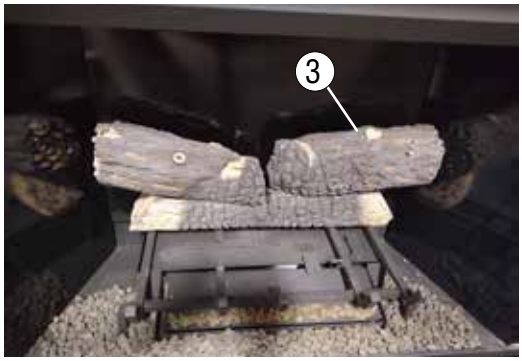

5. Place the middle left log #4 *(**Figure 47**)* on the setting pins in the middle of the grate *(**Figure 43**)*.
6. Place the front left forked log #5 over log #4 as shown in ***Figure 48***. One foot will rest between the 2nd and 3rd bar from the left on the grate.

Figure 47 - Place log #4

Figure 48 - Place log #5

7. The front right forked log #6 will roll back onto log #4 *(**Figure 49**)*. It has a setting pin which should face out from the rest of the logs.
8. The upper right forked log #7 is the final log in this process *(**Figure 50**)*. It rests on the 4th bar, on the setting pin of log #6 and on log #3.

Figure 49 - Place log #6

Figure 50 - Place log #7

Installing and removing the glass door

⚠ WARNING

- **Do not attempt to substitute the materials used on these doors, or replace cracked or broken glass.**
- **Handle this glass with extreme care! Glass is susceptible to damage—Do not scratch or handle roughly while reinstalling the glass door frame.**
- **The glass door of this appliance must only be replaced as a complete unit as provided by the manufacturer. Do not attempt to replace broken, cracked or chipped glass separately.**
- **Do not attempt to touch the front enclosure glass with your hands while the fireplace is in use.**

⚠ WARNING

A barrier designed to reduce the risk of burns from the hot viewing glass is provided with this appliance and shall be installed.

⚠ AVERTISSEMENT

Une barrière conçue pour réduire le risque de brûlure par le hublot chaude est fournie avec l'appareil et doit être installé.

⚠ WARNING

Do not operate appliance with the glass front removed, cracked, or broken.

⚠ AVERTISSEMENT

Ne pas utiliser l'appareil si le panneau frontal en verre n'est pas en place, est craqué, ou brisé.

⚠ WARNING

Any safety screen, guard or barrier removed for servicing an appliance must be replaced prior to operating the appliance.

⚠ AVERTISSEMENT

Tout écran ou protecteur retiré pour permettre l'entretien de l'appareil doit être remis en place avant de mettre l'appareil en marche.

⚠ WARNING

Do NOT abuse the glass door by striking it or slamming it shut.

⚠ WARNING

The door should easily close without needing to be pressed down. If it has to be pressed down to close, the gasket in the top of the door should be dressed so it lays on the glass.

Only doors certified with the fireplace shall be used.
Seules des portes certifiées pour cet appareil doivent être utilisées.

Installing the glass door

1. Visually inspect the gasket on the backside of the glass door.
   NOTE: The gasket surface must be clean, free of irregularities, and seated firmly. Ensure it is properly located. Make sure the bead is not rolled into the channel at the top of the door, but remains flat against the top of the glass.
2. Position the door in front of the firebox opening with the bottom of the door held away from the fireplace at a 45° angle *(**Figure 51**)*. Hook the top flange of the door frame over the top of the firebox frame.
   NOTE: Ensure the glass door is centered—with even spacing on each side.
3. Let the bottom of the glass door swing gently in towards the fireplace ensuring that the gasket seats evenly as the door draws shut. Securely fasten the two (2) latches beneath the firebox floor to the door V-flange.
   IMPORTANT NOTE: The door must close without force. When installed properly, the bottom of the door should not have interference with the fireplace in order to close. If it does, remove the door and inspect the door gasket to ensure it is even and not rolled up at the top. **SEE WARNING IN *Figure 51.***
4. Reinstall the facade that includes the required barrier.

Removing the glass door

1. If necessary, remove the door and place it in a safe location for later reinstallation.
2. Remove the facade. Place the facade in a safe location for later reinstallation.
3. Detach the two (2) door latches beneath the firebox floor.
4. Swing the bottom of the glass door away from the fireplace to a 45° angle *(**Figure 51**)*
5. Carefully grip the door at the top and bottom, and remove it from the fireplace. Place the door in a safe location for later reinstallation.

Figure 51 - Glass Door

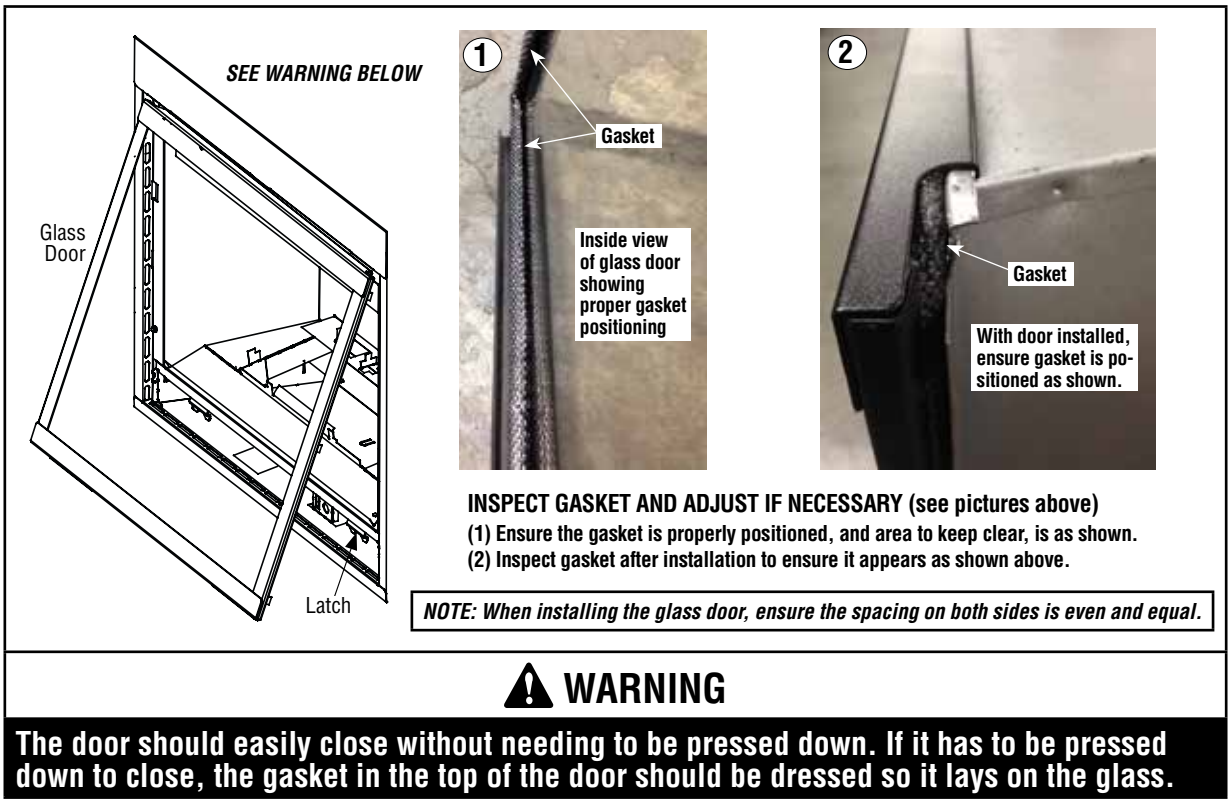

⚠ WARNING

The door should easily close without needing to be pressed down. If it has to be pressed down to close, the gasket in the top of the door should be dressed so it lays on the glass.

MAINTENANCE

Refer to the **Maintenance Schedule** on ***Page 68*** for maintenance tasks, procedures, frequency, and a listing of by whom the tasks should be performed. Always verify proper fireplace operation after servicing.

⚠ WARNING

Turn OFF gas and electrical power to the fireplace and allow it to cool before cleaning or servicing the appliance.

⚠ CAUTION

Wear gloves and safety glasses for protection while doing required maintenance.

Verify proper operation after servicing.

S'assurer que l'appareil fonctionne adéquatement une fois l'entretien terminé.

Always turn OFF gas before cleaning. Before relighting, refer to the lighting instructions in this manual. Instructions are also found on a pull-out panel located in the control compartment.

Always keep the appliance area clear and free from combustible materials, gasoline and other flammable liquids.

NOTE: Prior to the first use of the fireplace and each burn season and periodically during the burn season, inspect the horizontal termination for debris such as bird nests, leaves, paper or branches. Remove any items from the surfaces of the termination prior to use. Also be aware of shrubs and plantings that may encroach on the termination.

Inspecting the venting system

The fireplace and venting system should be thoroughly inspected before initial use and at least annually by a qualified service technician. Inspection should include ensuring that exhaust or intake passages are unobstructed and vent components are properly assembled and not damaged.

The homeowner must contact a qualified service technician at once if any abnormal condition is observed.

If the venting system is disassembled for any reason, a qualified service technician should follow vent installation instructions for proper reassembly and proper sealing of the venting system components. However, more frequent periodic inspections and cleanings should be performed by the homeowner.

NOTE: Inspect exhaust termination for blockage or obstruction such as plants, bird nests, leaves, snow, debris, etc.

NOTE: Prior to the first use of the fireplace and each burn season and periodically during the burn season, inspect the horizontal termination for debris such as bird nests, leaves, paper or branches. Remove any items from the surfaces of the termination prior to use. Also be aware of shrubs and plantings that may encroach on the termination.

Inspect burner flame and pilot flame appearance

Periodically inspect the burner and pilot flame. Ensure that the burner flame appearance resembles the flame shown in ***Figure 34C*** on ***Page 47*** and as described in **Flame Appearance and Sooting on *Page 46***. Any necessary burner flame adjustments must be performed by qualified personnel only *(**Page 46**)*. Refer to ***Page 44*** for more information about the pilot flame appearance. Contact a qualified service technician at once if any abnormal condition is observed.

Cleaning the glass door

⚠ WARNING

Do not use abrasive cleaners on glass. Never clean the glass when it is hot.

Clean the glass during the **Burn-in Period**, and then only when necessary and when the fireplace is cool. Wipe the surface with a clean, dampened, soft cloth. Follow with a dry, soft towel as desired. Take care not to scratch the glass surface. Periodically, remove any build-up caused by the following:

- During start-up, it is normal for condensation to form on the inside of the glass (this condensation and fog will usually disappear in a few minutes). The moisture can cause lint, dust and other airborne particles to cling to the glass surface.
- Initial curing of the high temperature paint and burning off of lubricants used in the manufacturing process may result in a film on the glass.
- A white coating may form on the glass as a result of impurities and minerals in the fuel.

Clean the glass two or three times each heating season, depending on the circumstances present. The following cleaning solutions are approved for use:

- Non-ammonia based glass cleaner
- Gas fireplace/stove glass cleaner

Inspecting the glass gasket

Visually inspect the gasket on the backside of the glass door. The gasket surface must be clean, free of irregularities, and seated firmly.

Cleaning the control compartment

Keep the control compartment clean by vacuuming or brushing it out at least twice a year. More frequent cleaning may be required due to excessive lint from carpeting, bedding material, etcetera. It is imperative that control compartments, burners and circulating air passageways of the appliance be kept clean.

Touching up paint in small areas

Only use a factory-supplied paint kit for any touch-ups. Paint is available at your local IHP dealer. Never attempt to paint a hot fireplace. Do not attempt to repaint the fireplace until the finish is completely cured *(Burn-in Period on **Page 57**)*. If the surface becomes stained or marred, it may be lightly sanded and touched up.

Logs

Removing and cleaning the logs

⚠ CAUTION

The fiber logs become very fragile after curing.

Carefully remove the logs. Clean carbon from the logs using a vacuum cleaner, or a soft bristle brush (e.g., paint brush).

Reinstalling the embers and logs

Carefully follow the placement instructions *(**Pages 61–63**)*. All logs should fit onto the corresponding pins and/or log stoppers. This will ensure proper flame and safe combustion.

NOTE: Improper positioning of logs can create carbon build-up and will alter the performance of the fireplace.

Replacing the logs

If the logs become damaged and need replacement, use only the proper replacement logs from manufacturer *(**Page 78**)*.

Cleaning the burner

Carefully remove the logs/media. Vacuum out any foreign matter on the burner (e.g., lint, carbon, etc.). Ensure the burner ports are free of debris.

NOTE: Improper positioning of logs/media can create carbon build-up and will alter the performance of the fireplace.

Inspecting the wiring

Refer to the wiring diagrams *(**Pages 40-42**)*.

⚠ CAUTION

When servicing controls, label all wires prior to disconnection. Wiring errors can cause improper and dangerous operation. Verify proper operation after servicing.

⚠ ATTENTION

Au moment de l'entretien des commandes, étiquetez tous les fils avant de les débrancher. Des erreurs de câblage peuvent entraîner un fonctionnement inadéquat et dangereux.

Inspect and clean all wire connections. Ensure that there is no wire melting or damage. The inspection should include:

- Terminals at the valve
- ON/OFF switch
- Remote control, or unit-mounted switch

MAINTENANCE SCHEDULE

See the tables below for detailed information about required maintenance, both regular and annual.

Maintenance Performed Annually—Before the Burning Season

Maintenance Task	Performed By	Procedure
Inspecting/Cleaning Burner, Logs, and Controls	Qualified Service Technician	Inspect valve and ensure it is properly operating. Check piping for leaks. Vacuum the control compartment, fireplace logs and burner area.
Check Flame Patterns and Flame Height	Qualified Service Technician	Verify the flame pattern and height displayed by the appliance. Flames must not impinge on the logs.
Inspecting/Cleaning Pilot and Burner	Qualified Service Technician	Remove any surface build-up on pilot and burner assembly. Wipe the pilot nozzles, igniter/flame rod and hood. Ensure the pilot flame engulfs the flame sensor as shown.
Checking Vent System	Qualified Service Technician	Inspect the vent system at the top and at the base (within the firebox) for signs of blockage or obstruction. Look for any signs of dislocation of the vent components.
Appliance Inspection	Qualified Service Technician	Perform the appropriate appliance inspection procedure detailed in this manual.
Replacing Glowing Embers Material	Homeowner/Qualified Services Technician	Remove old ember materials and vacuum the glowing embers (rockwool) placement area. Place new glowing embers as described in this document.

Maintenance Performed Periodically—After the Burning Season

Maintenance Task	Performed By	Procedure
Cleaning Firebox Interior	Homeowner	Carefully remove logs and glowing embers (rockwool). Vacuum out interior of the firebox. Clean firebox walls and log grate. Replace logs and glowing embers as detailed in this manual.
Check Flame Patterns and Flame Height	Homeowner	Verify the flame pattern and height displayed by the appliance. Flames must not impinge on the logs.
Checking Vent System	Homeowner	Inspect the vent system at the top and at the base (within the firebox) for signs of blockage or obstruction. Look for any signs of dislocation of the vent components.
Cleaning Front Glass Door	Homeowner	Clean as necessary following the directions provided in this manual. **Do not touch or attempt to clean the glass while hot.**

ACCESSORY COMPONENTS

Firebox Liner Kits

Blackstone

Blended Brown

Greystone

Black Reflective Porcelain

3 Piece Firebox Liner Kits			
Cat. No.	Model	Description	Used on
F4319	FLK4040BLK	Blackstone	40” Models
F4320	FLK4040GREY	Greystone	
F4321	FLK4040BB	Blended Brown	
F2914	BPLK40-DVA	Black Porcelain	
F4322	FLK4045BLK	Blackstone	45” Models
F4323	FLK4045GREY	Greystone	
F4324	FLK4045BB	Blended Brown	
F2915	BPLK45-DVA	Black Porcelain	

Termination Guard Kits

Termination Shroud
(fits H1968)

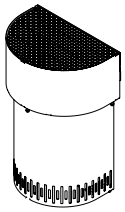

Deluxe Termination
Guard
(fits 94L10 and H1968)

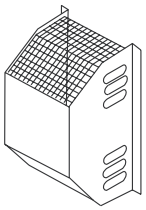

Termination Guard Kits

The vent termination guards may be used to minimize exposure to the hot surface of the termination.

Cat. No.	Model	Description
H5820	4.5HTSK	Termination Shroud
87L02	SV4.5HGS	Termination Guard, Deluxe

Touch-Up Paint Kits

Repair minor scratches and discoloration of the fireplace black painted surfaces with the touch-up paint kits.

Cat. No.	Model	Description
F1881	SCITPSAB	Black touch-up paint, firebox interior
F1882	SCTPSAB	Black touch-up paint, powder coat exterior

Firebox Media

Bag of Glowing Embers
Bag of Platinum Embers
Bag of Volcanic Stone

Replacement ember materials or volcanic stone are available for use with these appliances. Order kits as part of the periodic maintenance of the appliance.

Cat. No.	Model	Description
88L53	FGE	Bag of Glowing Embers
80L42	FDVS	Bag of Volcanic Stone
H8312	PGE	Bag of Platinum Embers

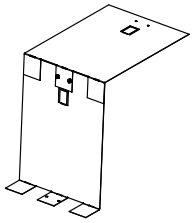

Elbow Heat Shield Kit

This is a heat shield for the vent elbow.

Cat. No.	Model	Description
F4066	SV4.5EHSK	Elbow Heat Shield

Decorative Facade Stone Stop Kits		
Cat. No.	Models	Description
F4052	ThkFacgKit40	40” Decorative Facade Stone Stop Kit
F4053	ThkFacgKit45	45” Decorative Facade Stone Stop Kit

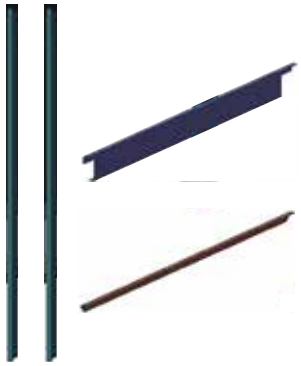

ACCESSORY COMPONENTS (cont.)

DRT4000-E Series Only

Thermostatic or Manual modes

- LCD Display
- Up to 9 hour Count down Timer
- Includes batteries
- Child lock
- Low battery indicator
- Receiver may be wall mounted or placed in the valve compartment

Remote, LCD Stat, Thermostat, On/Off		
Cat. No.	**Model No.**	**Description**
H8861	RC-S-STAT	Remote Control

DRT4000-E Series Only

Manual or up to 3 hr Countdown Timer modes

- LCD display
- Displays room temp. in ºF or ºC
- Flame icon and low battery indicator
- Includes batteries
- Wall clip included
- Receiver may be wall mounted or placed in the control compartment
- Includes white face plate
- Flame icon
- Low battery indicator
- Batteries included

Remote, Two Button, Timer, On/Off Or Timer Mode		
Cat. No.	**Model No.**	**Description**
H8860	RC-S-1	Remote Control

DRT4000-E Series Only

Cost Effective Solution

- Simple On/Off operation
- Works with millivolt and low voltage electronic ignition controls

Kit includes:
Remote and Receiver

Remote, Simple On/Off		
Cat. No.	**Model No.**	**Description**
F2236	RCKIT4001	Remote Control

DRT4000-E Series Only

Wall Thermostat

- Wall surface mounted
- Thermostat or manual ON/OFF operation
- Large LCD screen to display room and set temperature in ºF and ºC
- Connects to wall switch wire

Wall Thermostat, On/Off and Thermostatic functions		
Cat. No.	**Model No.**	**Description**
H8864	WS-S-TSTAT	Wall Thermostat

DRT4000-E Series Only

Wall Control

- 4-button timer with 30/60/120/OFF minutes
- Wall surface mounted
- Connects to wall switch wire
- Perfect for rental and resort applications

Wall Switch, Countdown Timer		
Cat. No.	**Model No.**	**Description**
H8863	WS-S-TMR	Wall Switch

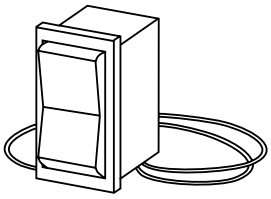

Unit-Mountable Rocker Switch Kit
This rocker switch kit can be installed directly in the control compartment to provide ON/OFF operation in lieu of a wall switch.

Unit-Mountable Rocker Switch		
Cat. No.	**Model No.**	**Description**
80L41	FRS	Rocker Switch

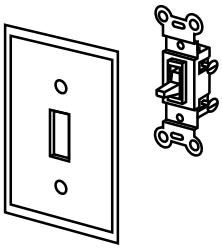

OFF/ON Wall Switch Kit
The OFF/ON wall switch kit can be used to control the operation of the fireplace burner or blower. Install the OFF/ON wall switch in a convenient location near the fireplace.

OFF/ON Wall Switch Kit		
Cat. No.	**Model No.**	**Description**
85L87	FWSK	OFF/ON Wall Switch Kit

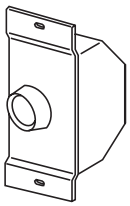

Variable Speed Wall Switch Kit
The variable speed wall switch kit provides variable speed control if the optional FBK-100 blower kit is installed.

OFF/ON Wall Switch Kit		
Cat. No.	**Model No.**	**Description**
045571H	VSWS	Wall Switch Kit

ACCESSORY COMPONENTS (continued)

Cat. No.	Model	Description	Used on
F5026	FVFBK40T	Facade - Vista Black, 40 Trad	40” Models
F3571	FRBK40T	Facade - Reflection, Black 40 Trad	
F3574	FRWC40T	Facade - Reflection, Warm Chestnut 40 Trad	
F3577	FCBK40T	Facade - Craftsman, Black 40 Trad	
F3580	FCWC40T	Facade - Craftsman, Warm Chestnut 40 Trad	
F5027	FVFBK45T	Facade - Vista Black, 45 Trad	45” Models
F3572	FRBK45T	Facade - Reflection, Black 45 Trad	
F3575	FRWC45T	Facade - Reflection, Warm Chestnut 45 Trad	
F3578	FCBK45T	Facade - Craftsman, Black 45 Trad	
F3581	FCWC45T	Facade - Craftsman, Warm Chestnut 45 Trad	

Facade Kits (Required Option)

VISTA
(Black)

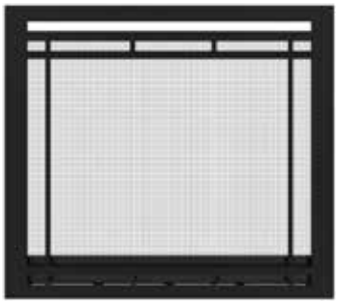

Craftsman
(Warm Chestnut and Black)

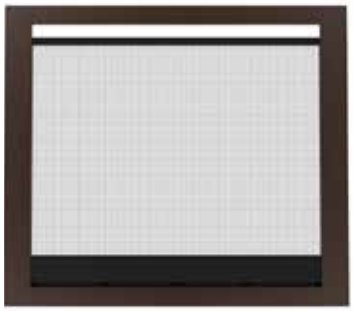

Reflection
(Warm Chestnut and Black)

Facade Details/Dimensions
Craftsman and Reflection

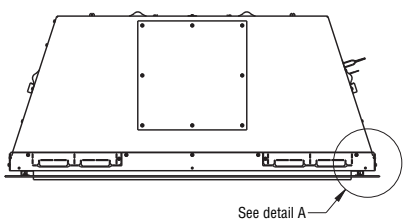

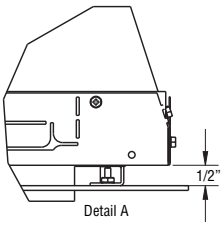

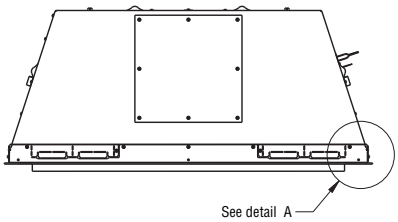

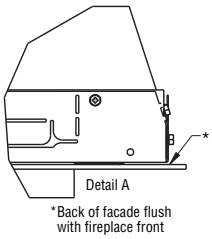

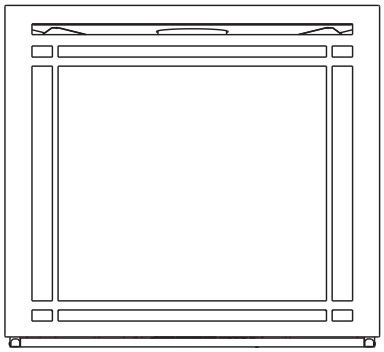

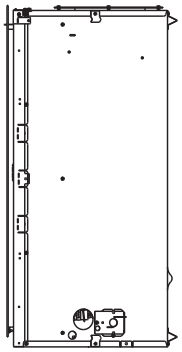

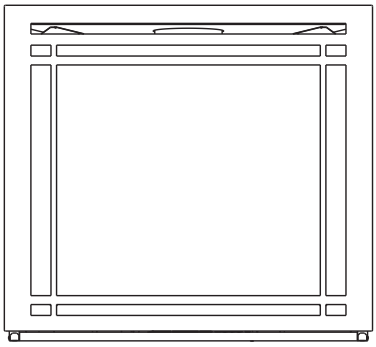

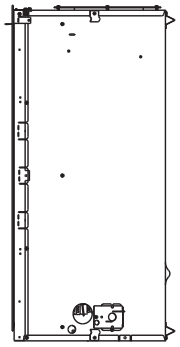

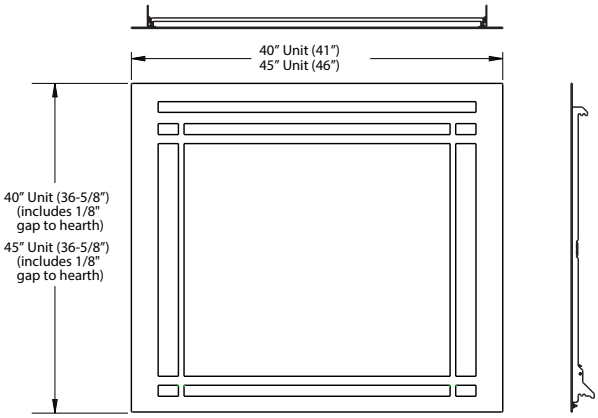

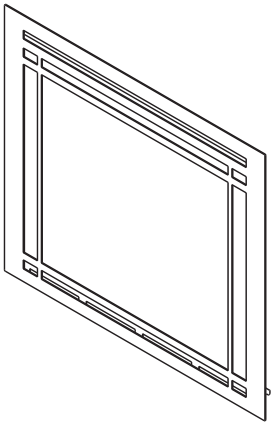

LIGHTING INSTRUCTIONS, DRT4000-E SERIES - ENGLISH

FOR YOUR SAFETY READ BEFORE OPERATING

WARNING: If you do not follow these instructions exactly, a fire or explosion may result causing property damage, personal injury or loss of life.

A. This appliance is equipped with an ignition device which automatically lights the pilot. Do not try to light the pilot by hand.

B. BEFORE OPERATING smell all around the appliance area for gas. Be sure to smell next to the floor because some gas is heavier than air and will settle on the floor.

WHAT TO DO IF YOU SMELL GAS:

- Do not try to light any appliance.
- Do not touch any electric switch; do not use any phone in your building.
- Immediately call your gas supplier from a neighbor's phone. Follow the gas supplier's instructions.
- If you cannot reach your gas supplier, call the fire department.

C. If any portion of this appliance does not operate as the instructions indicate, do not try to repair it, call a qualified service technician. Do not use tools. Force or attempted repair may result in a fire or explosion.

D. Do not use this appliance if any part has been under water. Immediately call a qualified service technician to inspect the appliance and to replace any part of the control system and any gas control which has been under water.

OPERATING INSTRUCTIONS

1. STOP! Read the safety information above on this label.
2. Read the Care and Operation manual including the section on "Remote Control System," (if applicable).
3. Slide the switch on the receiver, wall switch or ON/OFF switch to "OFF."
4. Turn "OFF" all electric power to the appliance. Note: The control may have a battery backup (remove batteries, if installed).
5. This appliance is equipped with an ignition device which automatically lights the pilot. Do not try to light the pilot by hand.
6. Wait five (5) minutes to clear out any gas. Then smell for gas, including near the floor. If you smell gas, STOP! Follow "B" in the safety information above on this label. If you don't smell gas, go to the next step.
7. Turn on all electric power to the appliance. Note: The control may have a battery backup (install batteries, if applicable).
8. Slide the switch on the receiver to REMOTE or ON/OFF switch /wall switch to ON.
9. (if applicable) Press ON/OFF button on remote control transmitter to "ON."
10. (if applicable) Set thermostat on remote control to desired setting.
11. If the appliance will not operate, follow the instructions "To Turn Off Gas To Appliance" and call your service technician or gas supplier.

Electronic Gas Control Valve - SIT

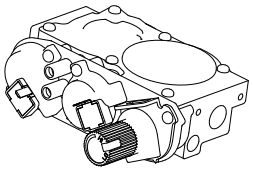

Electronic Pilot Assembly

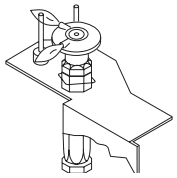

TO TURN OFF GAS TO APPLIANCE

1. Slide the switch on the receiver, wall switch or ON/OFF switch to "OFF.
2. (if applicable) Press ON/OFF button on remote control transmitter to "OFF."
3. Turn off all electric power to the appliance if service is to be performed. Note: The control may have a battery backup (remove batteries, if installed).
4. Close the main line gas shut-off valve.

DANGER

HOT GLASS WILL CAUSE BURNS.

DO NOT TOUCH GLASS UNTIL COOLED.

NEVER ALLOW CHILDREN TO TOUCH GLASS.

A barrier designed to reduce the risk of burns from the hot viewing glass is provided with this appliance and shall be installed for the protection of children and other at-risk individuals.

P/N 900337-00, Rev. 0

LIGHTING INSTRUCTIONS, DRT4000-E SERIES - FRENCH

POUR PLUS DE SÉCURITÉ LIRE AVANT DE METTRE EN MARCHE

AVERTISSEMENT. Quiconque ne respecte pas à la lettre les instructions dans la présente notice risque de déclencher un incendie ou une explosion entraînant des dommages, des blessures ou la mort.

A. Cet appareil est muni d'un dispositif d'allumage qui allume automatiquement la veilleuse. Ne tentez pas d'allumer la veilleuse manuellement.

B. AVANT DE FAIRE FONCTIONNER, reniflez tout autour de l'appareil pour déceler une odeur de gaz. Reniflez près du plancher, car certains gaz sont plus lourds que l'air et peuvent s'accumuler au niveau du sol.

QUE FAIRE SI VOUS SENTEZ UNE ODEUR DE GAZ :

- Ne pas tenter d'allumer d'appareil.
- Ne touchez à aucun interrupteur; ne pas vous servir des téléphones se trouvant dans le bâtiment.
- Appelez immédiatement votre fournisseur de gaz depuis un voisin. Suivez les instructions du fournisseur.
- Si vous ne pouvez rejoindre le fournisseur, appelez le service des incendies.

C. Si un élément de cette unité ne fonctionne pas tel que décrit dans les instructions, n'essayez pas de le réparer, appelez un technicien qualifié. N'utilisez-pas d'outils. Le fait de forcer la manette ou de la réparer peut déclencher une explosion ou un incendie.

D. N'utilisez pas cet appareil s'il a été plongé dans l'eau, même partiellement. Faites inspecter l'appareil par un technicien qualifié et remplacez toute partie du système de contrôle et toute commande qui ont été plongés dans l'eau.

INSTRUCTIONS DE MISE EN MARCHE

1. ARRÊTEZ ! Lisez les avertissements de sécurité à l'endos de cette étiquette.
2. Lisez le manuel d'utilisation et d'entretien incluant la section « Système de télécommande » (si applicable).
3. Placez l'interrupteur mural ou "on/off" en position "off."
4. Coupez l'alimentation électrique de l'appareil. Note: Le contrôleur peut avoir une batterie de secours (retirer les batteries au besoin).
5. Cet appareil est muni d'un dispositif d'allumage qui allume automatiquement la veilleuse. Ne tentez pas d'allumer la veilleuse manuellement.
6. Attendre cinq (5) minutes pour laisser échapper tout le gaz. Reniflez tout autour de l'appareil, y compris près du plancher, pour déceler une odeur de gaz. Si vous sentez une odeur de gaz, ARRÊTEZ ! Passez à l'étape B des instructions de sécurité sur la portion supérieure de cette étiquette. S'il n'y a pas d'odeur de gaz, passez à l'étape suivante.
7. Mettez l'appareil sous tension. Note: Le contrôleur peut avoir une batterie de secours (installer les batteries au besoin).
8. Placez l'interrupteur du récepteur en position "REMOTE" (ou l'interrupteur mural en position ON).
9. (Si applicable) Appuyez sur le bouton "ON/OFF" pour sélectionner "ON".
10. (Si applicable) Ajustez le thermostat sur la télécommande à l'ajustement désiré.
11. Si l'appareil ne se met pas en marche, suivez les instructions intitulées « Comment couper l'admission de gaz de l'appareil » et appelez un technicien qualifié ou le fournisseur de gaz.

Valve électronique - SIT

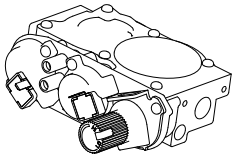

Module de veilleuse électronique

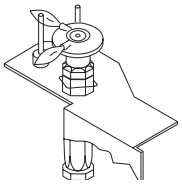

COMMENT COUPER L'ADMISSION DE GAZ DE L'APPAREIL

1. Placez l'interrupteur mural ou "on/off" en position "off."
2. (Si applicable) Sélectionnez OFF sur le récepteur.
3. Coupez l'alimentation électrique de l'appareil s'il faut procéder à l'entretien. Note: Le contrôleur peut avoir une batterie de secours (retirer les batteries au besoin).
4. Fermer la valve de gaz principale.

DANGER

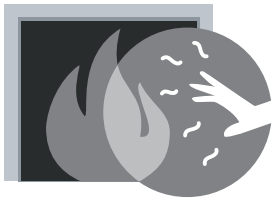

VITRE CHAUDE
RISQUE DE BRÛLURES.

NE TOUCHEZ PAS UNE VITRE NON REFROIDIE.

NE LAISSEZ JAMAIS UN ENFANT DE TOUCHER LA VITRE.

L'écran pare-étincelles fourni avec ce foyer réduit le risque de brûlure en cas de contact accidentel avec la vitre chaude et doit être installé pour la protection Des enfants et Des personnes à risques.

P/N 900334-00, Rev. 0

LIGHTING INSTRUCTIONS, DRT4200-E SERIES - ENGLISH

FOR YOUR SAFETY READ BEFORE OPERATING

WARNING: If you do not follow these instructions exactly, a fire or explosion may result causing property damage, personal injury or loss of life.

A. This appliance is equipped with an ignition device which automatically lights the pilot. Do not try to light the pilot by hand.

B. BEFORE OPERATING smell all around the appliance area for gas. Be sure to smell next to the floor because some gas is heavier than air and will settle on the floor.

WHAT TO DO IF YOU SMELL GAS:

- Do not try to light any appliance.
- Do not touch any electric switch; do not use any phone in your building.
- Immediately call your gas supplier from a neighbor's phone. Follow the gas supplier's instructions.
- If you cannot reach your gas supplier, call the fire department.

C. If any portion of this appliance does not operate as the instructions indicate, do not try to repair it, call a qualified service technician. Do not use tools. Force or attempted repair may result in a fire or explosion.

D. Do not use this appliance if any part has been under water. Immediately call a qualified service technician to inspect the appliance and to replace any part of the control system and any gas control which has been under water.

OPERATING INSTRUCTIONS

1. STOP! Read the safety information above on this label.
2. Read the Care and Operation manual including the section on "Remote Control System."
3. Slide the switch on the receiver to "OFF."
4. Press ON/OFF button on remote control transmitter to "OFF."
5. Turn "OFF" all electric power to the appliance.
6. This appliance is equipped with an ignition device which automatically lights the pilot. Do not try to light the pilot by hand.
7. Wait five (5) minutes to clear out any gas. Then smell for gas, including near the floor. If you smell gas, STOP! Follow "B" in the safety information above on this label. If you don't smell gas, go to the next step.
8. Turn on all electric power to the appliance.
9. Slide the switch on the receiver to REMOTE.
10. Press ON/OFF button on remote control transmitter to "ON."
11. Set thermostat on remote control to desired setting.
12. If the appliance will not operate, follow the instructions "To Turn Off Gas To Appliance" and call your service technician or gas supplier.

Electronic Gas Control Valve - SIT Proflame

Electronic Pilot Assembly

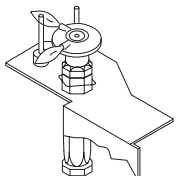

Receiver

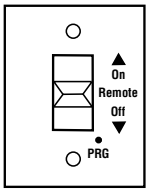

Remote Control Transmitter

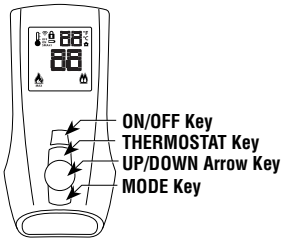

TO TURN OFF GAS TO APPLIANCE

1. Slide the switch on the receiver to "OFF."
2. Press ON/OFF button on remote control transmitter to "OFF."
3. Turn off all electric power to the appliance if service is to be performed.
4. Close the main line gas shut-off valve.

DANGER

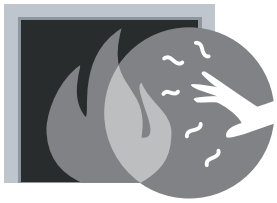

HOT GLASS WILL CAUSE BURNS.

DO NOT TOUCH GLASS UNTIL COOLED.

NEVER ALLOW CHILDREN TO TOUCH GLASS.

A barrier designed to reduce the risk of burns from the hot viewing glass is provided with this appliance and shall be installed for the protection of children and other at-risk individuals.

P/N 900330-00 Rev. 0

LIGHTING INSTRUCTIONS, DRT4200-E SERIES - FRENCH

POUR PLUS DE SÉCURITÉ LIRE AVANT DE METTRE EN MARCHE

AVERTISSEMENT. Quiconque ne respecte pas à la lettre les instructions dans la présente notice risque de déclencher un incendie ou une explosion entraînant des dommages, des blessures ou la mort.

A. Cet appareil est muni d'un dispositif d'allumage qui allume automatiquement la veilleuse. Ne tentez pas d'allumer la veilleuse manuellement.

B. AVANT DE FAIRE FONCTIONNER, reniflez tout autour de l'appareil pour déceler une odeur de gaz. Reniflez près du plancher, car certains gaz sont plus lourds que l'air et peuvent s'accumuler au niveau du sol.

QUE FAIRE SI VOUS SENTEZ UNE ODEUR DE GAZ :

- Ne pas tenter d'allumer d'appareil.
- Ne touchez à aucun interrupteur; ne pas vous servir des téléphones se trouvant dans le bâtiment.
- Appelez immédiatement votre fournisseur de gaz depuis un voisin. Suivez les instructions du fournisseur.
- Si vous ne pouvez rejoindre le fournisseur, appelez le service des incendies.

C. Si un élément de cette unité ne fonctionne pas tel que décrit dans les instructions, n'essayez pas de le réparer, appelez un technicien qualifié. N'utilisez-pas d'outils. Le fait de forcer la manette ou de la réparer peut déclencher une explosion ou un incendie.

D. N'utilisez pas cet appareil s'il a été plongé dans l'eau, même partiellement. Faites inspecter l'appareil par un technicien qualifié et remplacez toute partie du système de contrôle et toute commande qui ont été plongés dans l'eau.

INSTRUCTIONS DE MISE EN MARCHE

1. ARRÊTEZ ! Lisez les avertissements de sécurité à l'endos de cette étiquette.
2. Lisez le manuel d'utilisation et d'entretien incluant la section « Système de télécommande ».
3. Placez l'interrupteur du récepteur en position "OFF".
4. Appuyez sur le bouton "ON/OFF" pour sélectionner "OFF".
5. Coupez l'alimentation électrique de l'appareil.
6. Cet appareil est muni d'un dispositif d'allumage qui allume automatiquement la veilleuse. Ne tentez pas d'allumer la veilleuse manuellement.
7. Attendre cinq (5) minutes pour laisser échapper tout le gaz. Reniflez tout autour de l'appareil, y compris près du plancher, pour déceler une odeur de gaz. Si vous sentez une odeur de gaz, ARRÊTEZ ! Passez à l'étape B des instructions de sécurité sur la portion supérieure de cette étiquette. S'il n'y a pas d'odeur de gaz, passez à l'étape suivante.
8. Mettez l'appareil sous tension.
9. Placez l'interrupteur du récepteur en position "REMOTE".
10. Appuyez sur le bouton "ON/OFF" pour sélectionner "ON".
11. Ajustez le thermostat sur la télécommande à l'ajustement désiré.
12. Si l'appareil ne se met pas en marche, suivez les instructions intitulées « Comment couper l'admission de gaz de l'appareil » et appelez un technicien qualifié ou le fournisseur de gaz.

Valve électronique - SIT Proflame

Module de veilleuse électronique

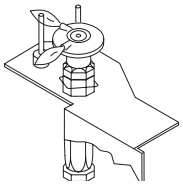

Récepteur

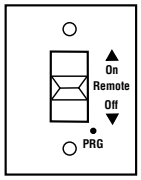

Télécommande

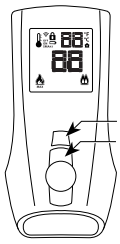

COMMENT COUPER L'ADMISSION DE GAZ DE L'APPAREIL

1. Coupez l'alimentation électrique de l'appareil s'il faut procéder à l'entretien.
2. Sélectionnez OFF sur le récepteur.
3. Appuyez sur le bouton ON/OFF et sélectionnez OFF.
4. Fermer la valve de gaz principale.

DANGER

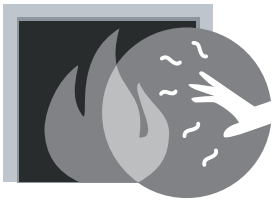

VITRE CHAUDE
RISQUE DE BRÛLURES.

NE TOUCHEZ PAS UNE VITRE NON REFROIDIE.

NE LAISSEZ JAMAIS UN ENFANT DE TOUCHER LA VITRE.

L'écran pare-étincelles fourni avec ce foyer réduit le risque de brûlure en cas de contact accidentel avec la vitre chaude et doit être installé pour la protection Des enfants et Des personnes à risques.

P/N 900331-00 Rev. 0

TROUBLESHOOTING - ELECTRONIC SYSTEMS

Before troubleshooting, ensure that the fireplace main line gas shutoff valve and the wall switch are in the ON position. The following troubleshoots the fireplace only to an elementary level. For detailed remote and ignition system troubleshooting, refer to the instructions provided with the remote.
Detailed valve system troubleshooting should only be performed by a qualified service technician.

SYMPTOM	POSSIBLE CAUSES	CORRECTIVE ACTION
1. Nothing happens when the fireplace is turned ON/OFF.	**a.** Remote is not functioning properly.	Operate the fireplace from the wall plate switch.
		Replace batteries in remote control and/or battery holder in control compartment.
	b. Gas is not reaching the fireplace.	Check the gas supply and gas shutoff valves. *
	c. Unit is not receiving power.	Check/replace backup batteries behind the wall plate.
		Replace unit battery backup.
		Check building circuit breakers to ensure power is ON to the fireplace.
2. The main burner does not light and the igniter is sparking.	**a.** Gas is not reaching the fireplace.	Check the gas supply and gas shutoff valves.
	b. Loose wires to the valve.	Check control compartment for any obviously loose wiring (call a service technician, if necessary).
	c. Loose wires to ignition module.	Check control compartment for any obviously loose wiring (call a service technician, if necessary).
	d. Air in the gas line.	Purge gas line of air (call a service technician if required).
	e. Unit is not receiving power.	Replace unit battery backup.
3. The main Burner comes on but then goes out.	**a.** Gas is not reaching the fireplace.	Check the gas supply and gas shutoff valves.
	b. Loose wires to the valve or ignition module.	Check control compartment for any obviously loose wiring (call a service technician, if necessary).
	c. Pilot flame is not engulfing the sensor.	Call a service technician.
	d. Obstructed vent system.	Call a service technician.
4. Soot is present on the logs and glass.	**a.** Excessive flame impingement on the logs.	Properly position the logs as detailed on ***Pages 61-63***.
	b. Initial fireplace operation.	A white film may develop on the glass during the first few fires as part of the burn-in process. The first few times you use the fireplace, clean the glass after each use (AFTER THE GLASS HAS COMPLETELY COOLED); otherwise, the white film will bake onto the glass and become difficult to remove. See glass cleaning instructions in the MAINTENANCE section of this manual.
	c. Improper vent restrictor setting.	Open the air shutter by adjusting the air shutter adjustment lever according to the instructions in this manual.
	d. Improper air shutter opening.	Open the air shutter by pushing in the rod.
5. Poor flame and/or blue flame.	**a.** Door seal is not properly aligned, causing gaps and air leaks.	Remove and realign the door so the gasket seal is fully engaged around the door frame.

***The unit may have multiple gas supply shutoffs (the main gas supply valve in the house, the gas supply valve in the fireplace control compartment, and/or an additional shutoff valve near the fireplace).**

REPLACEMENT PARTS

Cat. No.	Model	Description
F5011	DRT4040TEN-E	40” Top, Elec, NG
F5012	DRT4040TEP-E	40” Top, Elec, LP
F5013	DRT4045TEN-E	45” Top, Elec, NG
F5014	DRT4045TEP-E	45” Top, Elec, LP

Cat. No.	Model	Description
F5015	DRT4240TEN-E	40” DLX, Elec Top, NG
F5016	DRT4240TEP-E	40” DLX, Elec Top, LP
F5017	DRT4245TEN-E	45” DLX, Elec Top, NG
F5018	DRT4245TEP-E	45”DLX, Elec Top, LP

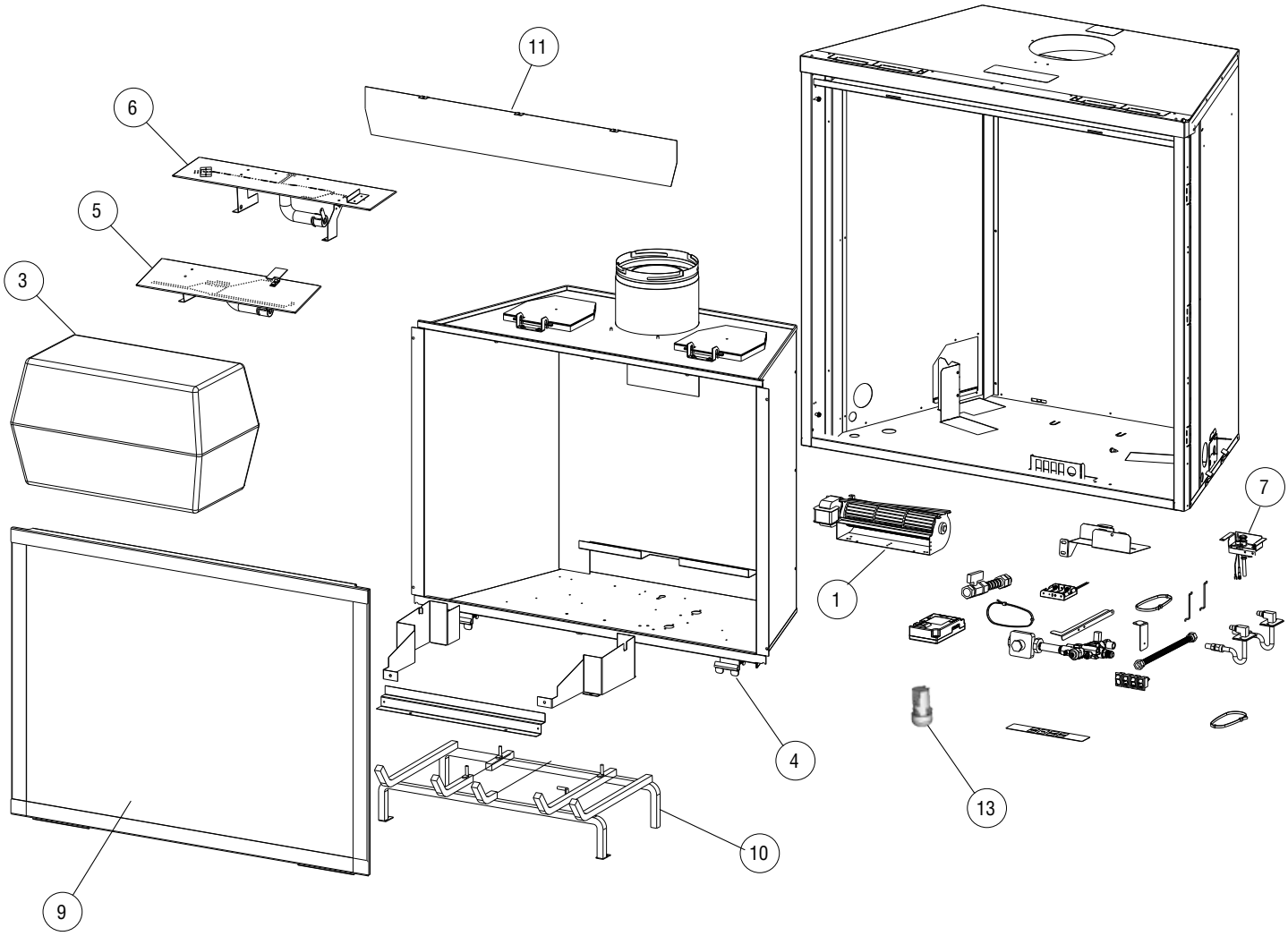

⚠ WARNING / AVERTISSEMENT

- **Never use substitute materials. Use of non-approved parts can result in poor performance and safety hazards.**
- **Failure to position the parts in accordance with these diagrams or failure to use only parts specifically approved with this appliance may result in property damage or personal injury.**
- **Risque de dommages ou de blessures si les pièces ne sont pas installées conformément à ces schémas et ou si des pièces autres que celles spécifiquement approuvées avec cet appareil sont utilisées.**

REPLACEMENT PARTS (continued)

Description		40” Models		45” Models	
		Catalog Number	Qty	Catalog Number	Qty
---	Black touch-up paint, powder coat, exterior, SCTPSAB	F1882	1	F1882	1
	Black touch-up paint, interior, SCITPSAB	F1881	1	F1881	1
1	Blower Assembly	80L84	1	80L84	1
---	Gas Flex Line Connector	93L32	1	93L32	1
3	Log Set	J8301	1	J8303	1
---	Base, Flue Restrictor	F3723	1	F3723	1
---	Flap, Restrictor	F3724	1	F3724	1
4	Door Latch Assembly Kit (2 latches per kit)	F3789	1	F3789	1
5	Burner Assembly, Front	F2921	1	F2921	1
6	Burner Assembly, Rear	F4326	1	F4328	1
---	Burner Rod	F2924	1	F2924	1
---	3/8” Flare Tee	F2923	1	F2923	1
7	Pilot Bracket	F3659	1	F3659	1
---	Air Shutter Control Arm	F2925	1	F2925	1
10	Grate Assembly	F2926	1	F2926	1
11	Lintel (non-DLX models)	F3827	1	F3828	1
11	Lintel (DLX models)	F3023	1	F3024	1
---	Fiberboard Standoff 4” - RNC	J7440	1	J7448	1
9	Door Assembly, Ceramic Glass (DRT4200-E models only)	J7389	1	J7390	1
9	Door Assembly, Tempered Glass (DRT4000-E models only)	F1842	1	F1906	
---	Touch-Up Paint (Interior)	F3373	1	F3373	1
---	Glowing Embers	88L53	1	88L53	1
---	Volcanic Stone	80L42	1	80L42	1
---	Flush-Mount Mounting Kit, FNF-KIT	F3695	1	F3695	1
---	Shield, Header	F3651	1	F3651	1
13	Replacement Bulb 25W Heat Resistant up to 300°C	F3939	2	F3939	2
---	Fiber Panel Retainer Kit	F4054	1	F4054	1
---	Hood for Vista Facade	F4941	1	F4942	1
---	Hood for Premium Craftsman and Reflection Facades	F3696	1	F3697	1
---	Vista Facade (includes Barrier Screen)	F5026	1	F5027	1
---	Barrier Screen for Craftsman/Reflection Facades	F3666	1	F3667	1

BURNER ORIFICE KITS (0 - 4500 ft - 0 - 1372 m)					
	Model	Natural Gas - REAR Orifice	Natural Gas - FRONT Orifice	Propane - REAR Orifice	Propane - FRONT Orifice
---	DRT4040-E	Cat. No. H3721 (#42, 0.0935”)	Cat. No. 19L52 (#55, 0.052”)	Cat. No. 19L52 (#55, 0.052”)	Cat. No. F2928 (#70, 0.028”)
---	DRT4045-E	Cat. No. F2927 (#41, 0.096”)	Cat. No. 19L52 (#55, 0.052”)	Cat. No. 19L52 (#55, 0.052”)	Cat. No. F2928 (#70, 0.028”)
---	DRT4240-E	Cat. No. 99K76 (#38, 0.1015”)	Cat. No. H8303 (#51, 0.067”)	Cat. No. 19L52 (#55, 0.052”)	Cat. No. 35M91 (#61, 0.039”)
---	DRT4245-E	Cat. No. 21L8001 (#35, 0.110”)	Cat. No. LB-55874D (#52, 0.0635”)	Cat. No. 37G00 (#52, 0.0635”)	Cat. No. 35M91 (#61, 0.039”)

REPLACEMENT PARTS (continued)

Electronic - DRT4000-E series

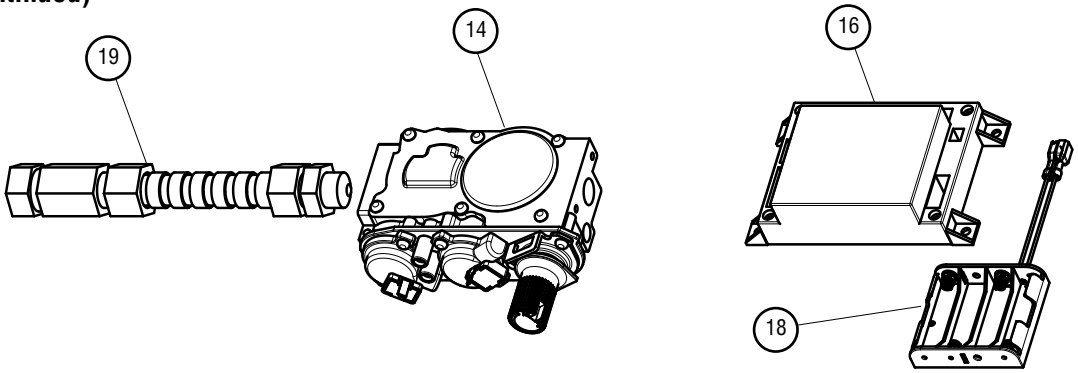

Electronic - DRT4200-E series

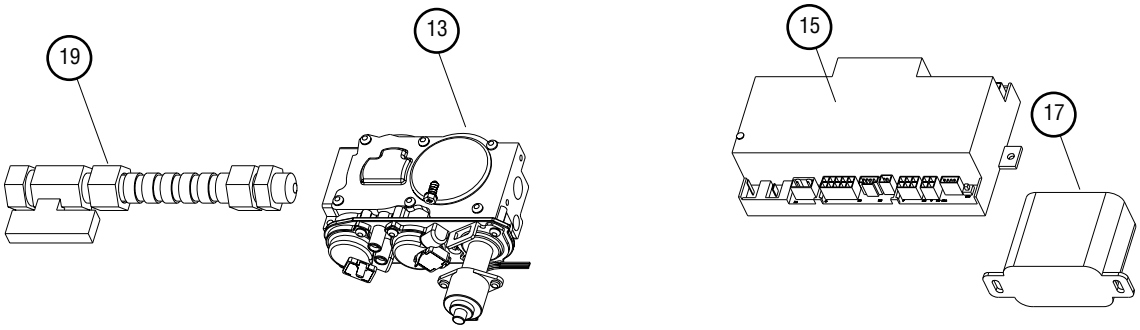

SIT Valve System Components									
Item #	Description	DRT4040		DRT4045		DRT4240		DRT4245	
		CAT No.	Qty	CAT No.	Qty	CAT No.	Qty	CAT No.	Qty
13	Gas Valve, Stepper Hi/Lo, SIT, Natural Gas	--	--	--	--	H7270	1	H7270	1
14	Gas Valve, Manual Hi/Lo, SIT, Natural Gas	H8844	1	H8844	1	--	--	--	--
15	IFC Ignition Module, Proflame II	--	--	--	--	H8656	1	H8656	1
16	DFC Ignition Module, Proflame I	J7906	1	J7906	1	--	--	--	--
17	Kit Wall Switch/Battery Holder, Proflame II	--	--	--	--	H8752	1	H8752	1
18	Battery Holder (for backup batteries), Proflame I	H8803	1	H8803	1	--	--	--	--
19	Gas Flex Line Connector with Shutoff	93L32	1	93L32	1	93L32	1	93L32	1
--	Pilot Assembly, SIT, Natural Gas	H7268	1	H7268	1	H7268	1	H7268	1
--	Orifice Holder	H7257	2	H7257	2	H7257	2	H7257	2
--	DFC Main Wire Harness, Proflame I	H8601	1	H8601	1	--	--	--	--
--	DFC Power Transformer, Proflame I	H8006	1	H8006	1	--	--	--	--
--	Electronic ON/OFF Switch	27K30	1	27K30	1	--	--	--	--
--	Electronic Ground Wire	H7278	1	H7278	1	H7278	1	H7278	1
--	IFC Main Wire Harness, Proflame II	--	--	--	--	H8814	1	H8814	1
--	IFC On/Off Jumper, Proflame II	--	--	--	--	H8809	1	H8809	1
--	IFC Power Wire Harness, Proflame II	--	--	--	--	H8811	1	H8811	1
--	Lights Wire Harness, Proflame II	--	--	--	--	F4276	1	F4277	1
--	Blower Wire Harness, Proflame II	--	--	--	--	H8817	1	H8817	1
--	IFC Light and Blower 5" Wire Harness, Proflame II	--	--	--	--	H8815	1	H8815	1
--	Remote Control, Proflame II	--	--	--	--	H8753	1	H8753	1
--	10 ft. Wall Switch Wire Harness, Proflame II	--	--	--	--	H8813	1	H8813	1
--	25 ft. Wall Switch Wire Harness, Proflame II	--	--	--	--	H8931	1	H8931	1

Innovative Hearth Products
Superior® Brand Gas Fireplaces, Stoves and Inserts
20 Year Limited Warranty

THE WARRANTY

Innovative Hearth Products ("IHP") 20 Year Limited Warranty warrants your Superior® Brand gas fireplace, Stove or Insert ("Product") to be free from defects in materials and workmanship at the time of manufacture. The product body, firebox and barrier carry the 20 Year Limited Warranty. Ceramic glass carries the 20 Year Limited Warranty against thermal breakage only. After installation, if covered components manufactured by IHP are found to be defective in materials or workmanship during the 20 Year Limited Warranty period and while the Product remains at the site of the original installation, IHP will, at its option, repair or replace the covered components. If repair or replacement is not commercially practical, IHP will, at its option, refund the purchase price or wholesale price of the IHP product, whichever is applicable. IHP will also pay IHP prevailing labor rates, as determined in its sole discretion, incurred in repairing or replacing such components for up to five years. THERE ARE EXCLUSIONS AND LIMITATIONS to this 20 Year Limited Warranty as described herein.

COVERAGE COMMENCEMENT DATE

Warranty coverage begins on the date of purchase. In the case of new home construction, warranty coverage begins on the date of first occupancy of the dwelling or six months after the sale of the Product by an independent IHP dealer/distributor, whichever occurs earlier. The warranty shall commence no later than 24 months following the date of product shipment from IHP, regardless of the installation or occupancy date.

EXCLUSIONS AND LIMITATIONS

This 20 Year Limited Warranty applies only if the Product is installed in the United States or Canada and only if operated and maintained in accordance with the printed instructions accompanying the Product and in compliance with all applicable installation and building codes and good trade practices.

This warranty is non-transferable and extends to the original owner only. The Product must be purchased through a listed supplier of IHP and proof of purchase must be provided. The product body, firebox and barrier carry the 20 Year Limited Warranty from the date of installation. Vent components, trim components and paint are excluded from this 20 Year Limited Warranty. The following do not carry the 20 Year Limited Warranty but are warranted as follows:

Burner – Repair or replacement for one year from the date of installation
Gas components – Repair or replacement for one year from the date of installation
Gaskets – Repair or replacement for one year from the date of installation
Logs – Replacement for one year from the date of installation against thermal breakage only
Optional blowers & remote controls – Repair or replacement for one year from the date of installation
Optional glass doors – Repair or replacement for 90 days from the date of installation
Tempered glass - Replacement for one year from the date of installation
Labor coverage – Prevailing IHP labor rates apply for the warranty period of the component

Parts not otherwise listed carry a 90 day warranty from the date of installation.

Whenever practicable, IHP will provide replacement parts, if available, for a period of 10 years from the last date of manufacture of the Product.

IHP will not be responsible for: (a) damages caused by normal wear and tear, accident, riot, fire, flood or acts of God; (b) damages caused by abuse, negligence, misuse, or unauthorized alteration or repair of the Product affecting its stability or performance (The Product must be subjected to normal use. The Product is designed to burn either natural or propane gas only. Burning conventional fuels such as wood, coal or any other solid fuel will cause damage to the Product, will produce excessive temperatures and could result in a fire hazard.); (c) damages caused by failing to provide proper maintenance and service in accordance with the instructions provided with the Product; (d) damages, repairs or inefficiency resulting from faulty installation or application of the Product.

IHP is not responsible for inadequate fireplace system draft caused by air conditioning and heating systems, mechanical ventilation systems, or general construction conditions which may generate negative pressure in the room in which the appliance is installed. Additionally IHP assumes no responsibility for drafting conditions caused by venting configurations, adjoining trees or buildings, adverse wind conditions or unusual environmental factors and conditions that affect the operation of the unit.

This 20 Year Limited Warranty covers only parts and labor as provided herein. In no case shall IHP be responsible for materials, components or construction, which are not manufactured or supplied by IHP or for the labor necessary to install, repair or remove such materials, components or construction. Additional utility bills incurred due to any malfunction or defect in equipment are not covered by this warranty. All replacement or repair components will be shipped F.O.B. from the nearest stocking IHP factory.

LIMITATION ON LIABILITY

It is expressly agreed and understood that IHP's sole obligation and the purchaser's exclusive remedy under this warranty, under any other warranty, expressed or implied, or in contract, tort or otherwise, shall be limited to replacement, repair, or refund, as specified herein.

In no event shall IHP be liable for any incidental or consequential damages caused by defects in the Product, whether such damage occurs or is discovered before or after repair or replacement, and whether such damage is caused by IHP's negligence. IHP has not made and does not make any representation or warranty of fitness for a particular use or purpose, and there is no implied condition of fitness for a particular use or purpose.

IHP makes no expressed warranties except as stated in this 20 Year Limited Warranty. The duration of any implied warranty is limited to the duration of this expressed warranty.

No one is authorized to change this 20 Year Limited Warranty or to create for IHP any other obligation or liability in connection with the Product. Some states and provinces do not allow the exclusion or limitation of incidental or consequential damages, so the above limitations or exclusions may not apply to you. The provisions of this 20 Year Limited Warranty are in addition to and not a modification of or subtraction from any statutory warranties and other rights and remedies provided by law.

INVESTIGATION OF CLAIMS AGAINST WARRANTY

IHP reserves the right to investigate any and all claims against this 20 Year Limited Warranty and to decide, in its sole discretion, upon the method of settlement.

To receive the benefits and advantages described in this 20 Year Limited Warranty, the appliance must be installed and repaired by a licensed contractor approved by IHP.

Contact IHP at the address provided herein to obtain a listing of approved dealers/distributors. **IHP shall in no event be responsible for any warranty work done by a contractor that is not approved without first obtaining IHP's prior written consent.**

HOW TO REGISTER A CLAIM AGAINST WARRANTY

In order for any claim under this warranty to be valid, you must contact the IHP dealer/distributor from which you purchased the product. If you cannot locate the dealer/distributor, then you must notify IHP in writing. IHP must be notified of the claimed defect in writing within 90 days of the date of failure. Notices should be directed to the IHP Warranty Department at 1769 East Lawrence Street; Russellville, AL 35654 or visit our website at WWW.SUPERIORFIREPLACES.US.COM.

Printed in U.S.A. © 2013 Innovative Hearth Products
P/N 900223-00, Rev. C 02/2018
Innovative Hearth Products
1769 East Lawrence Street • Russellville, AL 35654

NOTES

SuperiorFireplaces.us.com

Record the following important information about your fireplace:

Fireplace model number	
Fireplace serial number	
Date fireplace was Installed	
Type of gas fireplace uses	
Dealer name	

Innovative Hearth Products (IHP) reserves the right to make changes at any time, without notice, in design, materials, specifications, prices and also to discontinue colors, styles and products. Consult your local distributor for fireplace code information.

Printed in U.S.A. © 2024 Innovative Hearth Products
P/N 901277-00 REV. A 08/2024

P901277-00

1769 East Lawrence Street • Russellville, AL 35654